November 2026 Update Pack

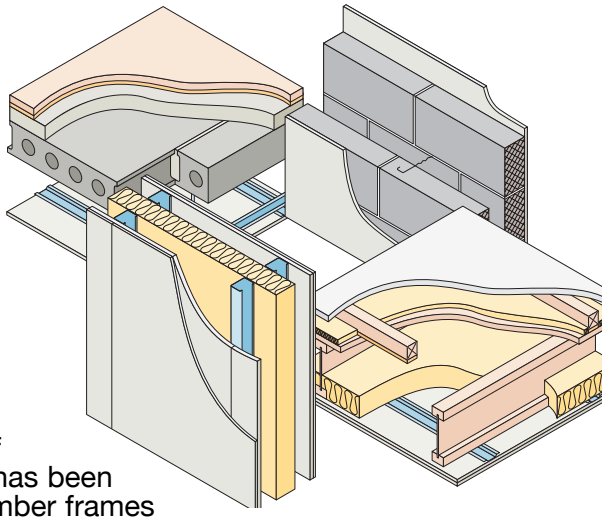

Dear Colleague,

Thank you for downloading this November 2026 update.

This update includes revisions to E-WM-34 to permit the use of blown mineral fibre insulation in 100mm wide cavities. E-WT-2 has been amended to permit factory installed blown mineral fibre filled timber frames as an alternative to built-in roll or batts. An alternative flanking condition has also been added to Appendix A2 which is compatible with the E-WT-2 timber frame separating wall where adjacent porches may be formed forward of the primary elevation.

Amendments to Appendix C, E and F harmonise the core floor structures and test conditions applicable in comparative laboratory tests with consequential amendments to the performance expectations of resilient bars used in separating floor specifications.

E-FC-15 has been updated to reflect the currently available resilient layer for use with this precast concrete separating floor solution.

Please update your April 2026, 4th Edition Handbook as follows:

1. Remove and replace **pages 9-10** of the Introduction.
2. Remove and replace **pages 1-2** and **5-6** of E-WM-34.
3. Remove and replace **all pages (1-8)** of E-WT-2.
4. Remove and replace **all pages (1-6)** of E-FC-15.
5. Remove and replace **pages 3-4** of E-FC-1.
6. Remove and replace **pages 3-4** of E-FT-1.
7. Remove and replace **pages 5-6** of E-FT-3.
8. Remove and replace **pages 3-4** of E-FT-5.
9. Remove and replace **pages 5-6** of E-FT-6.
10. Remove and replace **pages 3-4** of E-FS-2.
11. Remove and replace **pages 3-4** of E-FS-3.
12. Remove all pages **(1-16)** of Appendix A2 and replace with new pages **(1-18)**.
13. Remove and replace **all pages (1-2)** of Appendix C.
14. Remove and replace **all pages (1-2)** of Appendix E.
15. Remove and replace **all pages (1-2)** of Appendix F.

Yours sincerely

John Thompson

Executive Chair
Robust Details Limited

Changes to the fourth edition following November 2026 update

Section	Page	Amendment
Introduction		
Table 6a	10	Additional flanking condition applicable to timber separating walls.
Separating Wall – Masonry		
E-WM-34		
All	1 & 6	100mm cavities permitted for blown mineral fibre insulation.
Separating Wall – Timber		
E-WT-2		
All	1-8	Blown mineral fibre insulation permitted as an alternative for frames and central cavity shown as insulated.
Separating Floor – Concrete		
E-FC-1		
3 – Ceiling treatment	3	Resilient bar performance requirement amended to $rd\Delta R_w+C_{tr}$=11dB and $rd\Delta L_w$=13dB) for CT4.
E-FC-15		
All	1-6	Tekfloor TekRubber removed as an alternative resilient layer option.
Separating Floor – Timber		
E-FT-1		
5 – Ceiling treatment	4	Resilient bar performance requirement amended to $rd\Delta R_w+C_{tr}$=11dB and $rd\Delta L_w$=13dB).
E-FT-3		
9 – Ceiling treatment	6	Resilient bar performance requirement amended to $rd\Delta R_w+C_{tr}$=11dB and $rd\Delta L_w$=13dB).
E-FT-5		
5 – Ceiling treatment	4	Resilient bar performance requirement amended to $rd\Delta R_w+C_{tr}$=16dB and $rd\Delta L_w$=16dB).
E-FT-6		
9 – Ceiling treatment	6	Resilient bar performance requirement amended to $rd\Delta R_w+C_{tr}$=16dB and $rd\Delta L_w$=16dB).
Separating Floor – Metal Joists		
E-FS-2		
5 – Ceiling treatment	4	Resilient bar performance requirement amended to $rd\Delta R_w+C_{tr}$=11dB and $rd\Delta L_w$=13dB).
E-FS-3		
4 – Ceiling treatment	4	Resilient bar performance requirement amended to $rd\Delta R_w+C_{tr}$=16dB and $rd\Delta L_w$=16dB).

Section	Page	Amendment
Appendices		
Appendix A2		
Specific flanking conditions	16	New detail for supporting flanking walls above porch projections in timber frame houses.
Appendix C		
All	1-2	Revised core floor structure.
Appendix E		
All	1-2	Revised core floor structure and laboratory R'max value.
Appendix F		
All	1-2	Revised core floor structure and laboratory R'max value.

Table 6a – Robust Detail separating walls which can be used together with the specific flanking constructions contained in Appendix A2

		BRIDGESTOP® system	Smartroof system	Wall Cap RDA2	RoofSpace I-Roof	Space4 system	Donaldson Timber Single Leaf Spandrel	**NTS**ROOF *RAPID FIT SYSTEM*	Nu-Span Spantherm
Masonry walls	E-WM-1	✔		✔		✔		✔	✔
	E-WM-2	✔		✔		✔		✔	✔
	E-WM-3	✔	✔	✔	✔	✔		✔	✔
	E-WM-4	✔	✔	✔	✔	✔		✔	✔
	E-WM-5	✔	✔	✔	✔	✔		✔	✔
	E-WM-6		✔	✔	✔				✔
	E-WM-9								
	E-WM-10		✔	✔	✔				✔
	E-WM-11	✔	✔	✔	✔	✔		✔	✔
	E-WM-12	✔	✔	✔	✔	✔		✔	✔
	E-WM-13		✔	✔	✔				✔
	E-WM-17	✔	✔	✔	✔	✔		✔	✔
	E-WM-18	✔		✔		✔		✔	✔
	E-WM-19	✔ see note 1				✔		✔	
	E-WM-20	✔	✔	✔	✔	✔		✔	✔
	E-WM-21	✔		✔		✔		✔	✔
	E-WM-22	✔	✔	✔	✔	✔		✔	✔
	E-WM-23	✔ see note 1	✔	✔	✔				✔
	E-WM-24	✔ see note 1	✔	✔	✔				✔
	E-WM-25			✔					✔
	E-WM-26	✔	✔	✔	✔	✔		✔	✔
	E-WM-27	✔	✔	✔	✔	✔		✔	✔
	E-WM-28	✔	✔	✔	✔	✔		✔	✔
	E-WM-29			✔					✔
	E-WM-30	✔ see note 1	✔	✔	✔				✔
	E-WM-31		✔	✔	✔				✔
	E-WM-32	✔	✔	✔	✔	✔		✔	✔
	E-WM-33	✔	✔	✔	✔	✔		✔	✔
	E-WM-34	✔	✔	✔	✔	✔		✔	✔
	E-WM-35	✔ see note 1	✔	✔	✔				✔

Key

1 When constructing these walls off raft foundations, the raft must have insitu concrete with 150mm minimum thickness.

See over for timber and steel frame walls

Table 6a (continued) – Robust Detail separating walls which can be used together with the specific flanking constructions contained in Appendix A2

		Smartroof system	Kingspan TEK	Wall Cap RDA2	RoofSpace I-Roof	Space4 system	Donaldson Timber Single Leaf Spandrel	**NTS**ROOF *RAPID FIT SYSTEM*	Lightweight external cladding systems	Nu-Span Spantherm	Flanking wall support above porch projections
Timber walls	**E-WT-1**	✔	✔	✔	✔		✔	✔	✔	✔	
	E-WT-2	✔	✔	✔	✔	✔	✔	✔	✔	✔	✔
Steel walls	**E-WS-1**				✔					✔	
	E-WS-2										
	E-WS-3										
	E-WS-4			✔						✔	
	E-WS-5										

Separating Wall – Cavity Masonry

Plasmor “Aglite Ultima’ lightweight aggregate blocks ■
Built-in or blown mineral wool insulation ■
Gypsum-based board (nominal 8 kg/m²) on dabs ■

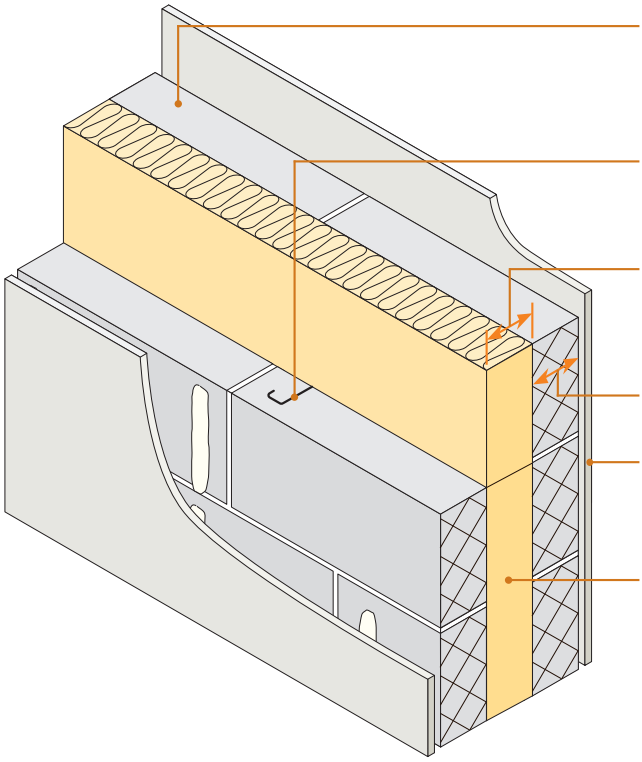

Block density	Only Plasmor “Aglite Ultima” block density 1050 kg/m³
Wall ties	Approved Document E ‘Tie type A’ (see Appendix A)
Cavity width	100mm (min)
Block thickness	100mm (min), each leaf
Wall finish	Gypsum-based board (nominal 8 kg/m²) mounted on dabs
Insulation	100mm mineral wool roll, quilt or batt with a density of 12-25 kg/m³ or blown mineral fibres with an installed density of max 25 kg/m³
External (flanking) wall	Masonry (both leaves) with 50mm (min) cavity – clear, fully filled or partially filled with insulation

DO

- Keep cavity, insulation rolls and wall ties free from mortar droppings and debris
- Fully fill all blockwork joints with mortar
- Make sure there is no connection between the two leaves except for wall ties, insulation and foundation
- If using blown fibres, ensure all injection holes are drilled through mortar joints, and made good by fully filling with mortar
- If using built-in insulation, ensure all insulation sections are tightly butted together and half cuts are made with a clean sharp knife and are installed in accordance with the manufacturer’s instructions
- Keep any chases for services to a minimum and fill well with mortar. Stagger chases on each side of the wall to avoid them being back to back
- Refer to Appendix A

1. External (flanking) wall junction

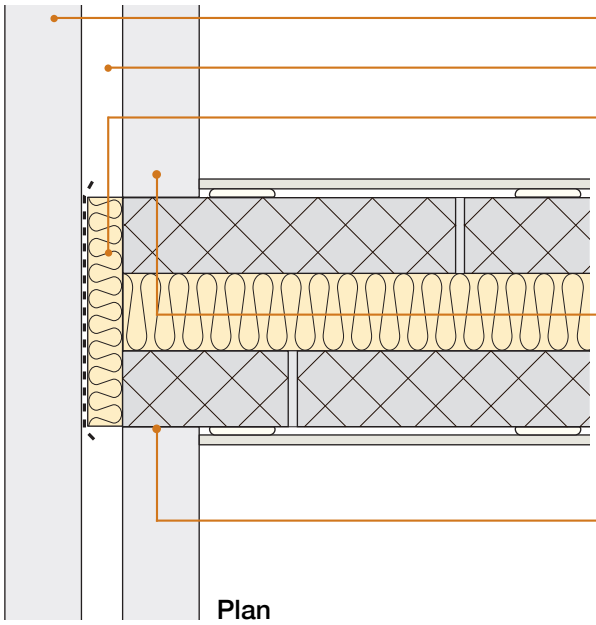

Masonry outer leaf

External wall cavity (min 50mm)

Close external wall cavity with a flexible cavity stop. (Optional if external wall cavity is fully filled with built in mineral wool insulation)

Inner leaf
- 100mm (min) Plasmor “Aglite Ultima” 1050 kg/m³ block
- internal finish 13mm plaster or nominal 8 kg/m² gypsum-based board

Tooth or tie walls together

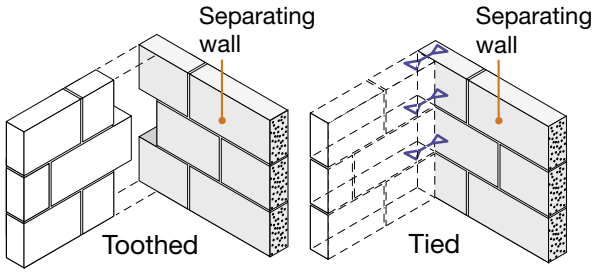

2. Staggered external (flanking) wall junction

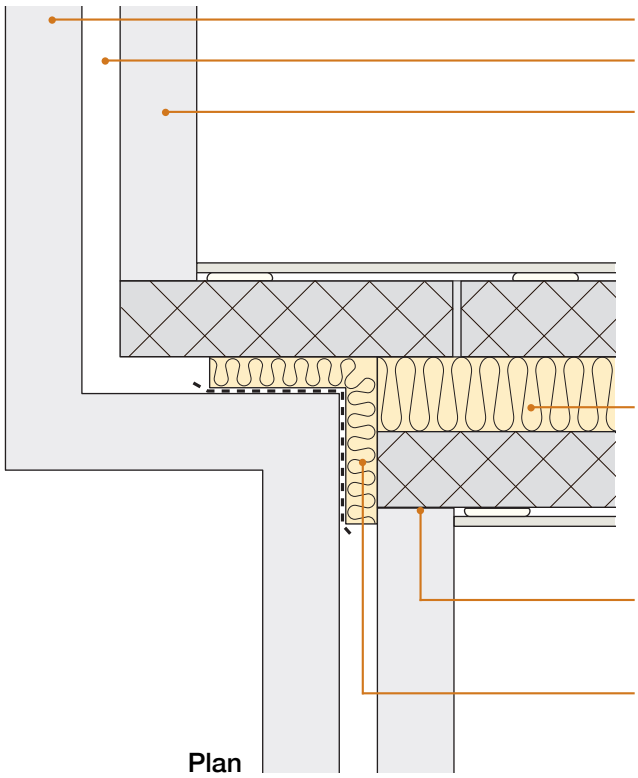

Masonry outer leaf

External wall cavity (min 50mm)

Inner leaf
- 100mm (min) Plasmor “Aglite Ultima” 1050 kg/m³ block
- internal finish 13mm plaster or nominal 8 kg/m² gypsum-based board

100mm mineral wool roll, quilt or batt with a density of 12-25 kg/m³ or blown mineral fibres with an installed density of max 25 kg/m³

Tooth or tie walls together

Close external wall cavity with a flexible cavity stop. (Optional if external wall cavity is fully filled with built in mineral wool insulation)

7. Roof junction – pitched roof without room-in-roof

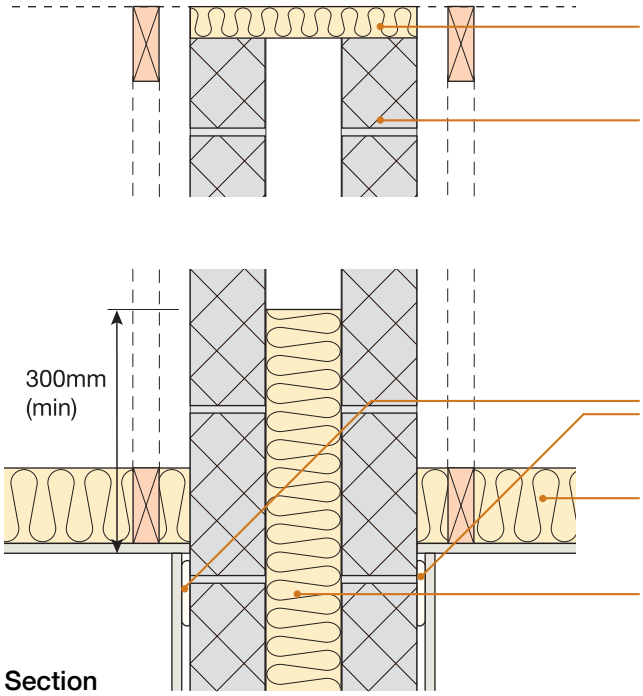

Section

Junction between separating wall and roof filled with flexible closer

Cavity masonry separating wall continuous to underside of roof. Alternatively use spandrel panel – see Appendix A

External wall cavity closed at eaves level with a suitable flexible material (e.g. mineral wool). If a rigid material is used, then it should only be bonded to one leaf

Continuous horizontal ribbon of adhesive

100mm (min) mineral wool insulation – 10 kg/m³ (min)

100mm mineral wool roll, quilt or batt with a density of 12-25 kg/m³ or blown mineral fibres with an installed density of max 25 kg/m³

8. Roof junction – pitched roof with room-in-roof

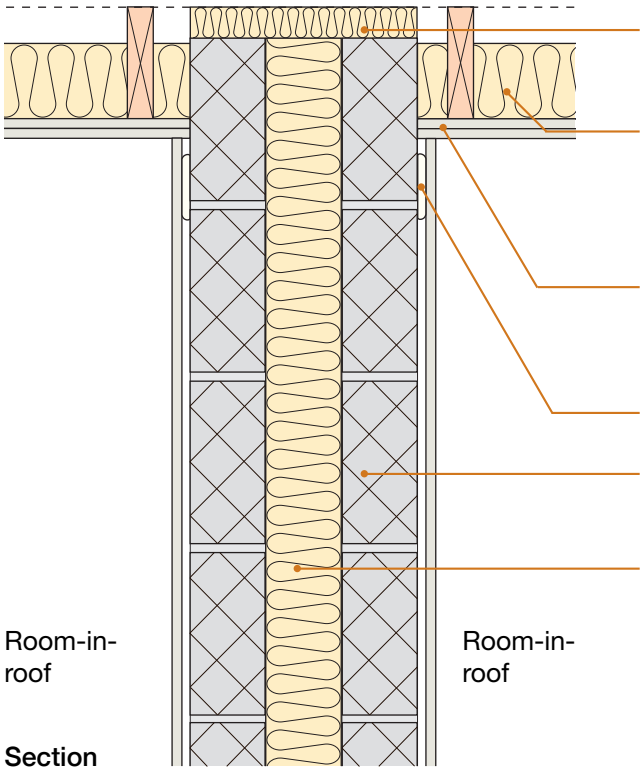

Section

Junction between separating wall and roof filled with flexible closer

100mm (min) mineral wool insulation minimum density 10 kg/m³ or 60mm (min) foil faced PUR or PIR insulation, minimum density 30 kg/m³ (See Appendix A)

2 layers of nominal 8 kg/m² gypsum-based board. Where used rigid insulation may be placed between and/or directly beneath rafters

Continuous horizontal ribbon of adhesive

Cavity masonry separating wall continuous to underside of roof covering

100mm mineral wool roll, quilt or batt with a density of 12-25 kg/m³ or blown mineral fibres with an installed density of max 25 kg/m³

External wall cavity closed at eaves level with a suitable flexible material (e.g. mineral wool). If a rigid material is used, then it should only be bonded to one leaf

CHECKLIST (to be completed by site manager/supervisor)

Company:

Site:

Plot: Site manager/supervisor:

Ref.	Item	Yes (✔)	No (✔)	Inspected (initials & date)
1.	Is separating wall cavity min 100mm?			
2.	Is external (flanking) wall cavity at least 50mm?			
3.	Are separating wall blocks and external (flanking) wall blocks Plasmor "Aglite Ultima" 1050 kg/m^3 blocks?			
4.	Is cavity free from droppings and debris?			
5.	Are separating wall ties to Approved Document E "Tie type A" (see Appendix A)?			
6.	Are cavity stops installed where specified in the Robust Detail?			
7.	Are joints fully filled?			
8.	For blown insulation, are all injection holes drilled through the mortar joints, and made good by fully filling with mortar?			
9.	For built-in insulation, are insulation rolls tightly butted together?			
10.	Are voids around floor joists, chases, etc. fully filled/sealed?			
11.	Where there is a separating floor (e.g. flats/apartments) has the resilient flanking strip been installed?			
12.	Are all junctions of wall and ceiling boards sealed with tape or caulked with sealant?			
13.	Is separating wall satisfactorily complete?			

Contact details for technical assistance from Plasmor, manufacturer of "Aglite Ultima" lightweight aggregate blocks:

Telephone: 01977 673221 **Fax:** 01977 607071 **E-mail:** knott@plasmor.co.uk

Notes (include details of any corrective action)

Site manager/supervisor signature . . . . . .

® UK registered trade mark no. 2291665

© Robust Details Limited 2011. All rights reserved. No part of this Handbook (other than the checklists) may be reproduced in any material form or issued or communicated to the public (including photocopying or storing it in any medium by electronic means, and whether or not transiently or incidentally to some other use of this Handbook) without the prior written permission of Robust Details Limited except in accordance with the provisions of the Copyright, Designs and Patents Act 1988.
Warning: the doing of an unauthorised act in relation to a copyright work may result in both a civil claim for damages and criminal prosecution.

Separating Wall – Timber Frame

With full, partial or no sheathing ■
Twin timber frames ■

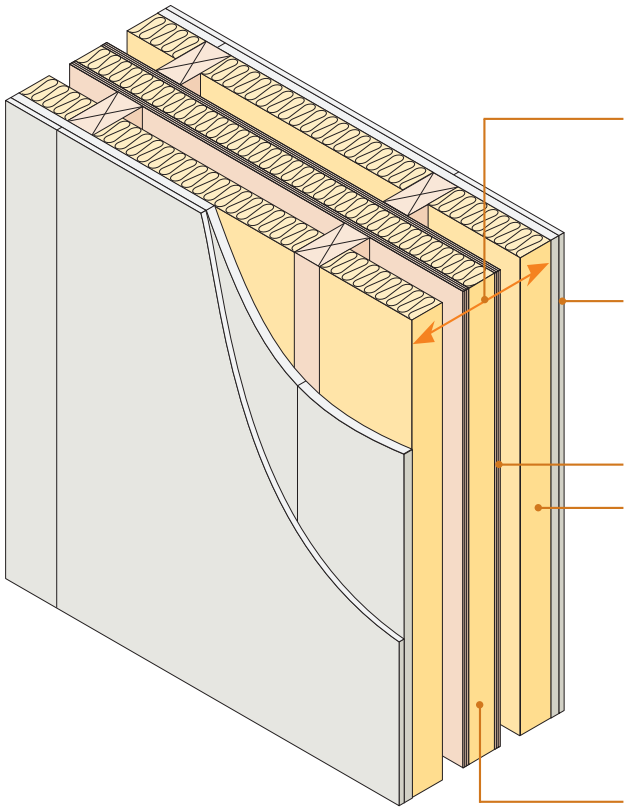

Wall width	240mm (min) between inner faces of wall linings. 50mm (min) cavity (gap between wall panels) 68mm (min) between stud frames
Wall lining	- 2 or more layers of gypsum-based board (total nominal mass per unit area 22 kg/m^2), both sides - all joints staggered
Sheathing	9mm (min) thick board
Absorbent material within frames	60mm (min) mineral wool batts or quilt (density 10 – 60 kg/m^3) both sides Alternatively, use blown mineral wool factory installed in closed panels to achieve a S1 settlement classification to BS EN 14064-1
Absorbent material within cavity	Full-fill mineral wool quilt or batts with a density of 18 – 40 kg/m^3
Ties	Ties between frames not more than 40mm x 3mm, at 1200mm (min) centres horizontally, one row of ties per storey height vertically
External (flanking) wall	Outer leaf masonry with minimum 50mm cavity

Note: This specification is intended for use where the extent of sheathing required to the cavity face of the separating wall is greater than that permitted for E-WT-1.

Structural framing details may vary slightly between different manufacturers and this is permitted, however, all dimension specifications within this Robust Detail must be adhered to.

Separating wall insulation notes

Mineral wool roll or batts used in frames may be un-faced, paper-faced or wire reinforced.

Mineral wool thickness in the cavity should be no greater than 10mm wider than the cavity to avoid excessive compression of the insulation.

DO

- Keep wall linings at least 240mm apart
- Ensure that the minimum gap between the wall panels is maintained
- Ensure quilt or batts cover whole lining area, fitting tight between studs without sagging
- Ensure that all cavity stops/closers are flexible or are fixed to one frame only
- Make sure there is no connection between the two leaves except where ties are necessary for structural reasons (see above)
- Stagger joints in wall linings to avoid air paths
- Seal all joints in outer layer with tape or caulk with sealant
- Refer to Appendix A

1. External (flanking) wall junction

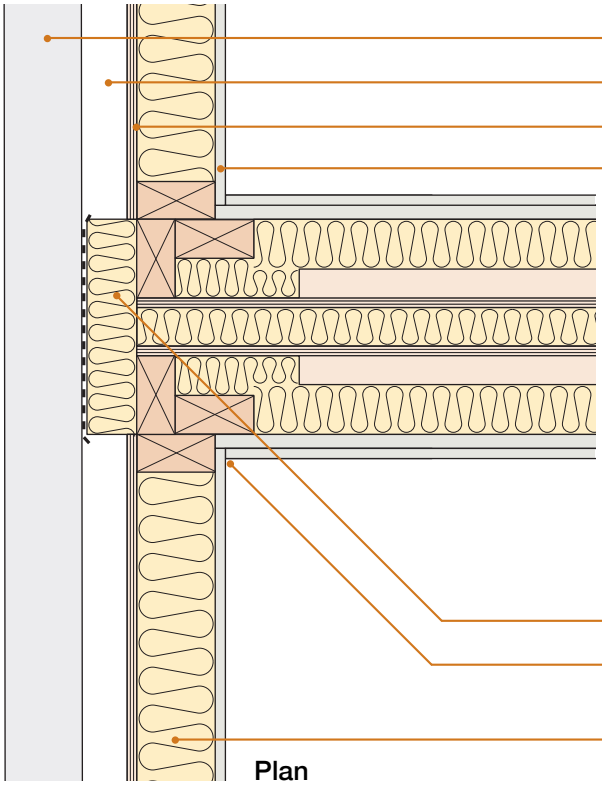

Masonry outer leaf (min 100mm thick)

External wall cavity (min 50mm)

Sheathing board

Inner leaf where there is no separating floor e.g. for houses

- one layer of gypsum-based board nominal 8 kg/m²

Inner leaf where there is a separating floor, e.g. for flats/apartments

- if using robustdetails® for floor, refer to Table 3b in introduction to select an acceptable robustdetails® separating floor and use two layers of gypsum-based board nominal 8kg/m² each layer
- if using floor requiring pre-completion testing, seek specialist advice

Close cavity with a cavity stop (see Appendix A)

Seal all perimeter joints with tape or caulk with sealant

Mineral wool insulation 10 kg/m³ (min); 70mm (min) EPS or foil faced PIR with no gaps

2. Staggered external (flanking) wall junction

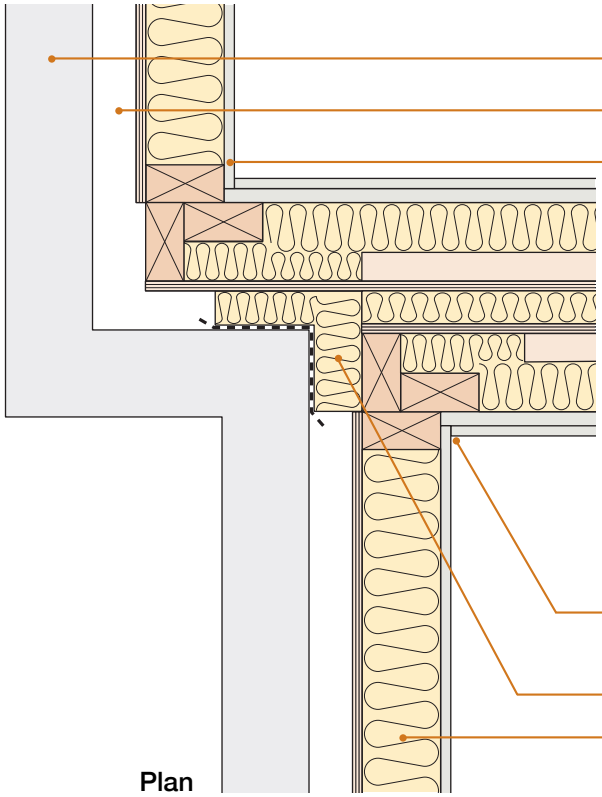

Masonry outer leaf (min 100mm thick)

External wall cavity (min 50mm)

Inner leaf where there is no separating floor e.g. for houses

- one layer of gypsum-based board nominal 8 kg/m²

Inner leaf where there is a separating floor, e.g. for flats/apartments

- if using robustdetails® for floor, refer to Table 3b in introduction to select an acceptable robustdetails® separating floor and use two layers of gypsum-based board nominal 8kg/m² each layer
- if using floor requiring pre-completion testing, seek specialist advice

Seal all perimeter joints with tape or caulk with sealant

Close cavity with a cavity stop (see Appendix A)

Mineral wool insulation 10 kg/m³ (min); 70mm (min) EPS or foil faced PIR with no gaps

3. Internal floor junction

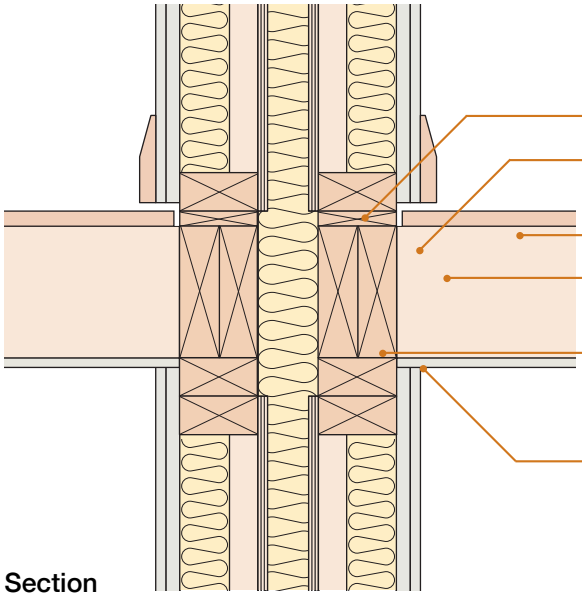

Section

- Floor decking may run under sole plates
- Internal floor to comply with Building Regulations Requirement E2
- Floor joists may span in either direction
- Internal floors should not be continuous between dwellings
- Close spaces between floor joists with full depth timber blocking where joists are at right angles to wall
- Seal all perimeter joints with tape or caulk with sealant

4. Separating floor junction

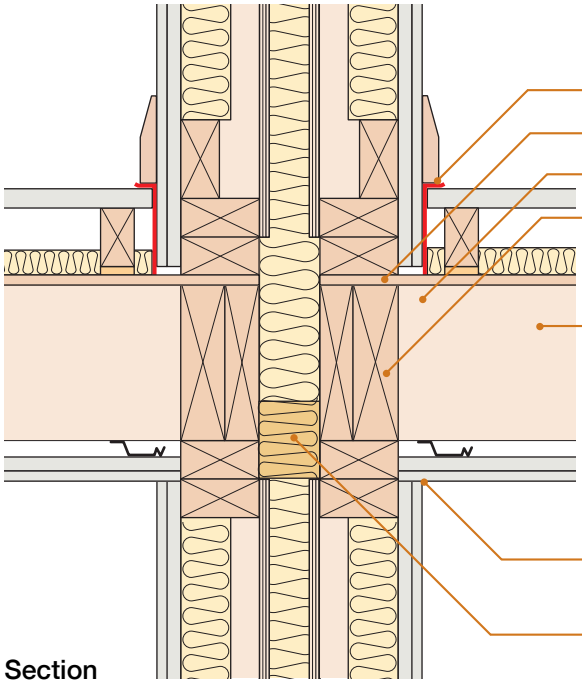

Section

- 5mm (min) resilient flanking strip
- Floor decking may run under sole plates
- Floor joists may span in either direction
- Close spaces between floor joists with full depth timber blocking or continuous header joist where joists are at right angles to wall
- Separating floor:
  - if using robustdetails® for floor, refer to Table 3b in introduction and see Robust Detail for separating floor for floating floor and ceiling options
  - if using floor requiring pre-completion testing, seek specialist advice
- Seal all perimeter joints with tape or caulk with sealant
- Flexible cavity stop where required by other regulations

Sketch shows E-FT-1 type separating floor

Alternative detail

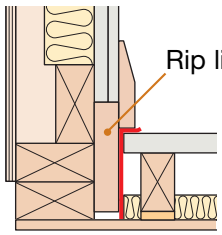

5. Internal wall junction

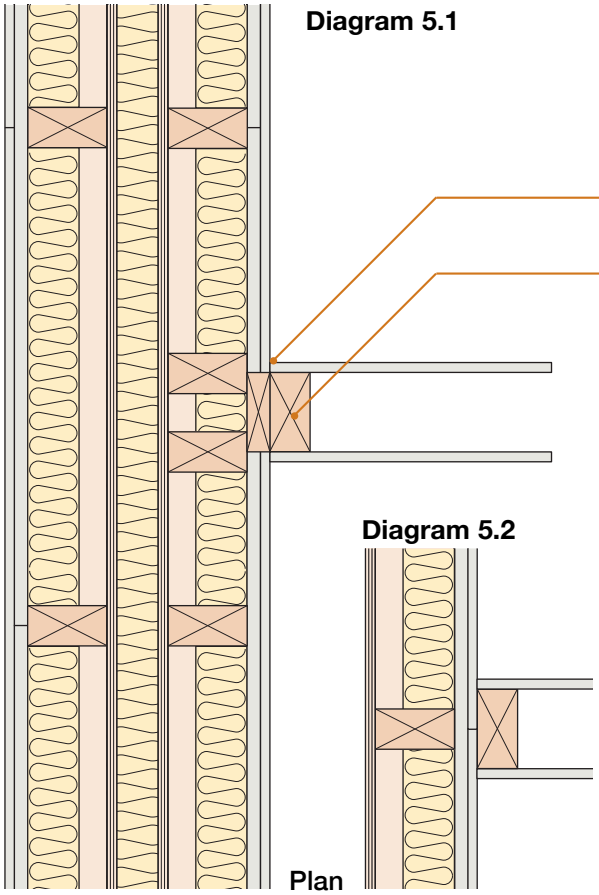

Seal all perimeter joints with tape or caulk with sealant

Where required internal wall to comply with Building Regulations Requirement E2

Diagram 5.1 shows junction detail where the internal wall is fixed through the separating wall lining; other junction details are acceptable provided all joints are sealed with tape or caulked with sealant

Diagram 5.2 shows junction where the separating wall lining is continuous

6. Ground floor junction: timber floor, beam and block, precast concrete plank, cast in-situ concrete suspended slab or ground bearing slab

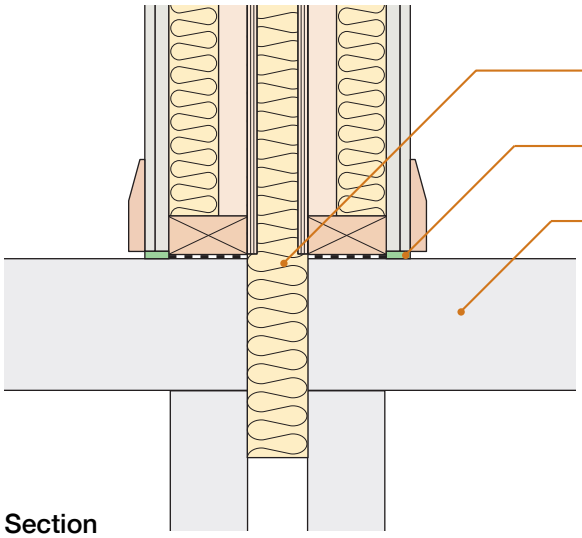

Section

*Note – Ensure substructure masonry is correctly set out to enable timber frame to achieve the required gap between wall panels

Ground floors not continuous between dwellings

Flexible or acoustic sealant (may be omitted when timber ground floor is used)

Ground floor construction:

- timber floor joists:
  - may span in either direction
  - floor decking may run under sole plates
  - close spaces between floor joists with full depth timber blocking where joists are at right angles to wall, or
- beam and block floor with all voids filled with mortar, or
- precast concrete planks with all voids between planks and blockwork filled with mortar or flexible sealant, or
- cast in-situ concrete suspended slab, or
- ground bearing slab

7. Raft foundation

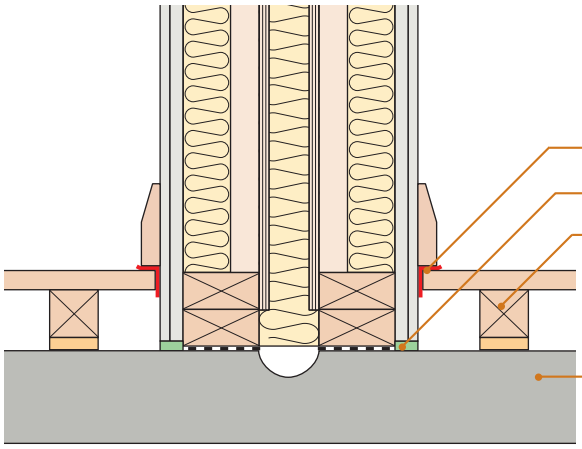

Section

5mm (min) resilient flanking strip

Flexible or acoustic sealant

A floating floor treatment must be used (for ground floor floating floor treatments mineral fibre quilt is not required between the battens or cradle system)

Concrete raft - mass per unit area of 365 kg/m^2 (min)

Alternative detail with screed finish

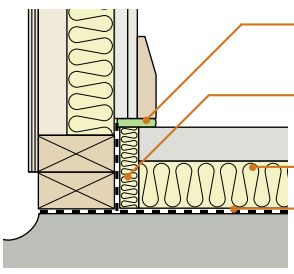

Mastic sealant, ensure skirting and wall lining are isolated from screed

Perimeter insulation, isolating screed from timber frame

Below screed insulation, isolating screed from raft

Polyethylene

8. Roof junction - pitched roof with no room-in-roof

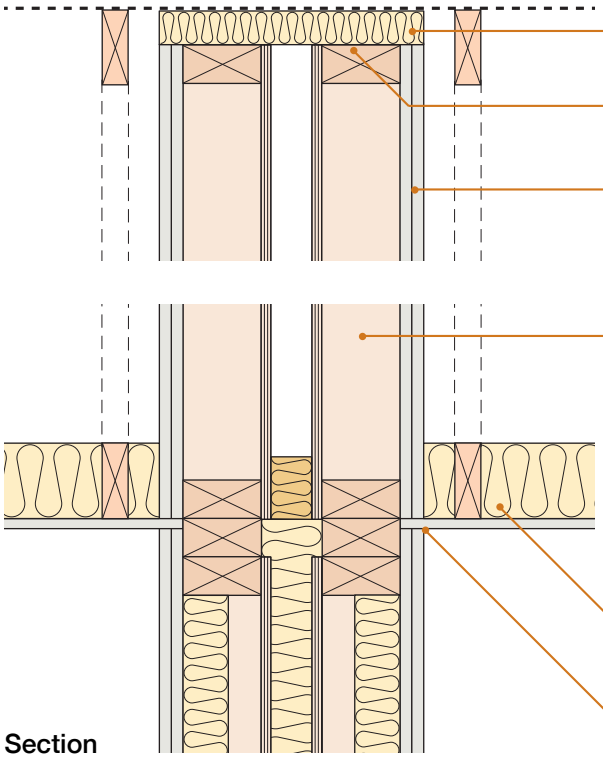

Section

- Junction between separating wall and roof filled with flexible closer
- Cavity separating wall continuous to underside of roof
- Wall lining above ceiling – 2 or more layers of gypsum-based board (minimum total nominal mass per unit area 16 kg/m²), both sides, all joints staggered
- Absorbent material not required in separating wall above ceiling
  Alternatively use spandrel panel - see Appendix A
- External wall cavity closed at eaves level with a suitable flexible material (e.g. mineral wool).
  If a rigid material is used, then it should only be bonded to one leaf
- 100mm (min) mineral wool insulation, 10 kg/m³ (min), between ceiling joists
- Seal all perimeter joints with tape or caulk with sealant

9. Roof junction - pitched roof with room-in-roof

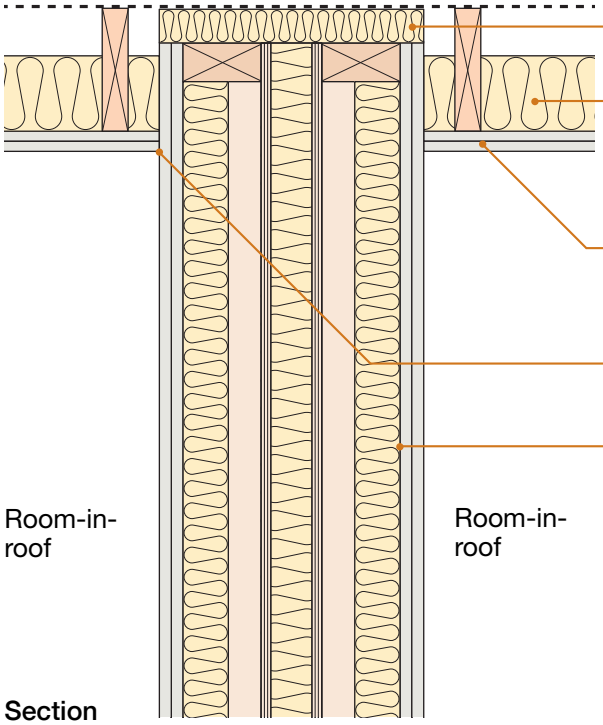

Section

- Junction between separating wall and roof filled with flexible closer
- 100mm (min) mineral wool insulation minimum density 10 kg/m³ or 60mm (min) foil faced PUR or PIR insulation, minimum density 30 kg/m³ (See Appendix A)
- 2 layers of nominal 8 kg/m² gypsum-based board. Where used, rigid insulation may be placed between and/or directly beneath rafters
- Seal all perimeter joints with tape or caulk with sealant
- Cavity timber separating wall continuous to underside of roof covering
- External wall cavity closed at eaves level with a suitable flexible material (e.g. mineral wool). If a rigid material is used, then it should only be bonded to one leaf

10. Services and sockets in the separating wall

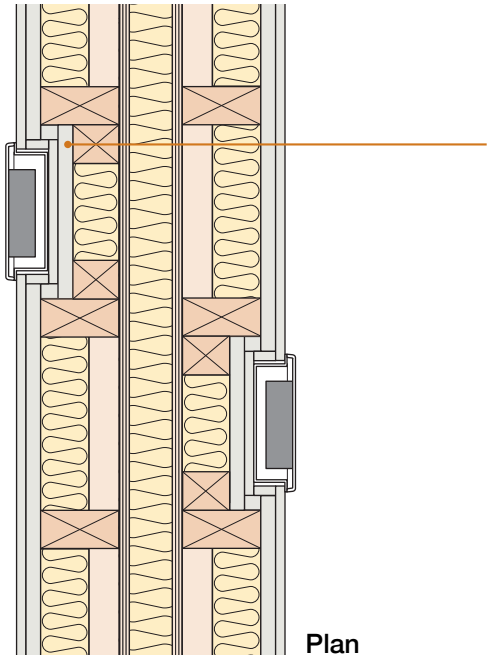

Plan

9.1 – electrical sockets, switches, etc.

Provide two or more layers of gypsum-based board (total nominal mass per unit area 22 kg/m^2) to enclose electrical boxes

Alternatively, fire resistant putty pads or other proprietary liner may be used with sockets, provided:

a) They achieve a laboratory performance of no worse than rdΔR_w+C_{tr} = -1dB
See Appendix H.

b) They are installed in accordance with the manufacturer's instructions.

Stagger sockets, switches, etc. on each side of the wall such that they are not positioned in opposite bays

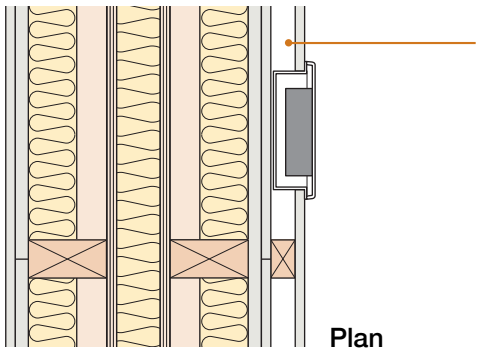

Plan

Alternatively provide a service void on surface of separating wall. This is the preferred method where more than one socket, switch, etc. are close together, e.g. in a kitchen.

Studs or battens used to create the service zone should be securely fixed back to the separating wall structure

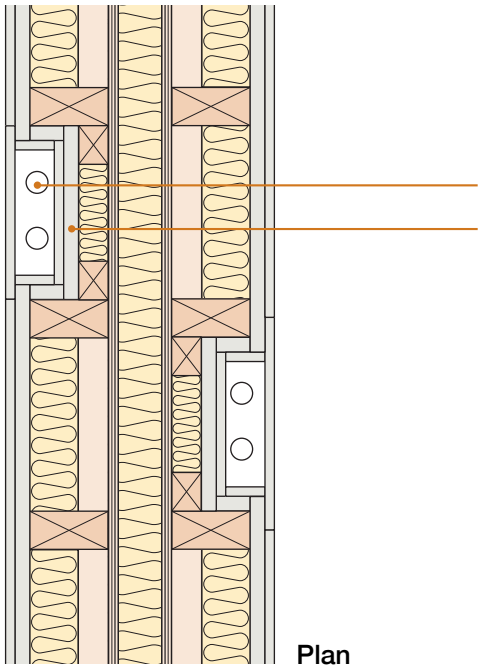

Plan

9.2 – piped services

Service duct within separating wall

Provide two or more layers of gypsum-based board (total nominal mass per unit area 22 kg/m^2) to enclose pipes

Stagger services on each side of wall such that they are not positioned in opposite bays

Note: this detail is not applicable for SVPs or gas pipes.

CHECKLIST (to be completed by site manager/supervisor)

Company:

Site:

Plot: Site manager/supervisor:

Ref.	Item	Yes (✔)	No (✔)	Inspected (initials & date)
1.	Are wall linings at least 240mm apart?			
2.	Are sheathing boards at least 50mm apart?			
3.	Are stud frames at least 68mm apart?			
4.	Is absorbent material at least 60mm thick?			
5.	Does absorbent material cover whole lining area except above ceiling line in roof void zone?			
6.	Are all joints in wall lining staggered?			
7.	Is separating wall lining correct mass per unit area on both sides?			
8.	Are all joints sealed with tape or caulked with sealant?			
9.	Are services installed in accordance with sketches 9.1 and 9.2?			
10.	If there is a separating floor (e.g. in flats/apartments) has the resilient flanking strip been provided?			
11.	Is separating wall satisfactorily complete?			

Notes (include details of any corrective action)

Site manager/supervisor signature . . . . . .

® UK registered trade mark no. 2291665

© Robust Details Limited 2011. All rights reserved. No part of this Handbook (other than the checklists) may be reproduced in any material form or issued or communicated to the public (including photocopying or storing it in any medium by electronic means, and whether or not transiently or incidentally to some other use of this Handbook) without the prior written permission of Robust Details Limited except in accordance with the provisions of the Copyright, Designs and Patents Act 1988.
Warning: the doing of an unauthorised act in relation to a copyright work may result in both a civil claim for damages and criminal prosecution.

3. Ceiling treatments for E-FC-1

All ceiling treatments must be installed in accordance with the manufacturer's instructions. All ceiling joints must be sealed with tape or caulked with sealant.

The maximum load on resilient bars shall not exceed that specified in the manufacturer's instructions.

Note: the sound insulation performance of all ceiling treatments is increased if:

- 25mm (min) mineral wool quilt is placed in the ceiling void, and/or
- resilient hangers are used.

Downlighters and recessed lighting

Provided there is a minimum ceiling void of 75mm downlighters or recessed lighting may be installed in the ceiling:

- in accordance with the manufacturer's instructions
- at no more than one light per 2m² of ceiling area in each room or see Appendix F
- at centres not less than 0.75m
- into openings not exceeding 100mm diameter or 100x100mm

Particular attention should also be paid to Building Regulations Part B - Fire Safety

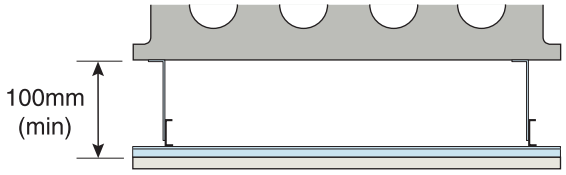

CT1 – Metal ceiling system - 100mm void

- any metal ceiling system providing 100mm (min) ceiling void
- one layer of nominal 8 kg/m² gypsum-based board

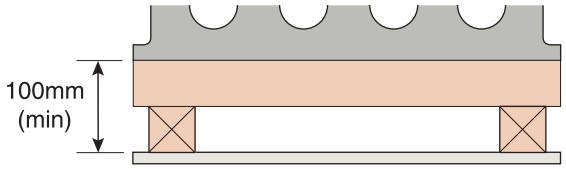

CT2 – Timber battens and counterbattens

- 50x50mm softwood battens
- 50x50mm counterbattens
- one layer of 8 kg/m² gypsum-based board

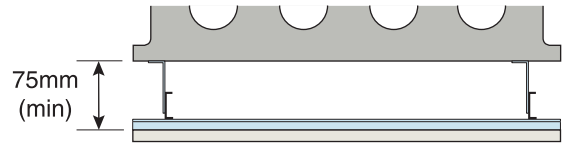

CT3 – Metal ceiling system - 75mm void

- any metal ceiling system providing 75mm (min) ceiling void
- one layer of nominal 10 kg/m² gypsum-based board

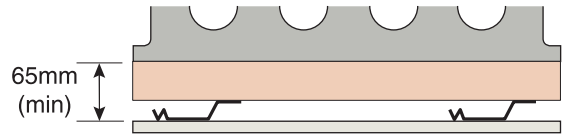

CT4 – Timber battens and metal resilient bars

Only suitable for use in conjunction with 200mm (min) precast concrete floor plank of mass per unit area 300 kg/m² (min).

- 50x50mm softwood battens
- metal resilient ceiling bars mounted at right angles to the battens (bars must achieve a minimum laboratory performance of rd$\Delta R_w + C_{tr}$ = 11dB and rdΔL_w = 13dB) - see Appendix E
- one layer of minimum nominal 10 kg/m² gypsum-based board

4. Floating floor treatments for E-FC-1

All floating floor treatments :

a) Must achieve a minimum laboratory performance of rdΔL_w=17dB - see Appendix D.

b) Must be installed in accordance with the manufacturer's instructions.

c) Require 5mm (min) resilient flanking strips around the perimeter of the flooring board to isolate floor from walls and skirting.

d) For further guidance on floating floor treatments and flanking strips, please refer to Appendix A.

* Note - void dimensions indicated are when floor is loaded to 25 kg/m^2.

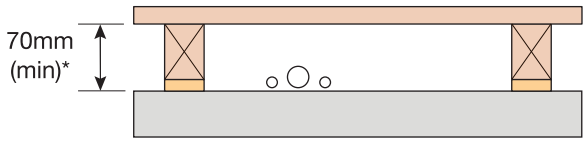

FFT 1 – Resilient composite deep batten system

- 18mm (min) t&g flooring board
- resilient layer must be continuous and pre-bonded to batten
- resilient composite deep battens
- ensure any services do not bridge the resilient layer
- battens may have the resilient layer at the top or the bottom

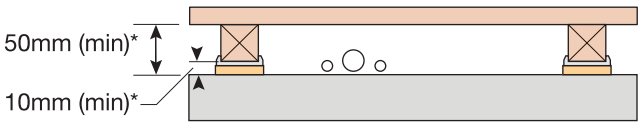

FFT 2 – Resilient cradle and batten system

- 18mm (min) t&g flooring board
- cradle and batten
- ensure any services do not bridge the resilient layer

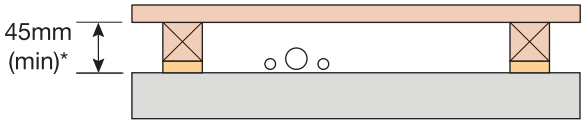

FFT 3 – Resilient composite standard batten system

- 18mm (min) t&g flooring board
- resilient layer must be continuous and pre-bonded to batten
- resilient composite standard battens
- ensure any services do not bridge the resilient layer
- battens may have the resilient layer at the top or the bottom

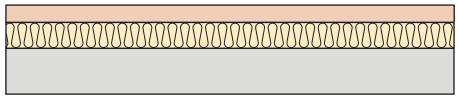

FFT 4 – Resilient overlay platform floor system

- proprietary platform system inclusive of resilient layer greater than or equal to 16 kg/m^2 mass per unit area
- no services to be installed in floor system*

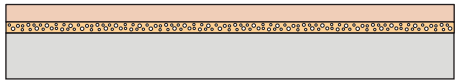

FFT 5 – Resilient overlay shallow platform floor system

- 9mm (min) t&g flooring board
- resilient layer pre-bonded to flooring board
- no services to be installed in floor system*

***** Additional under floor heating layers may be incorporated within FFT4 and FFT5 provided the complete build-up, using all components, has been tested to give a minimum laboratory performance of rdΔL_w=17dB - see Appendix D.

Separating Floor – Concrete

E-FC-15

Precast concrete plank ■
Screed laid on Regupol Quietlay resilient layer ■

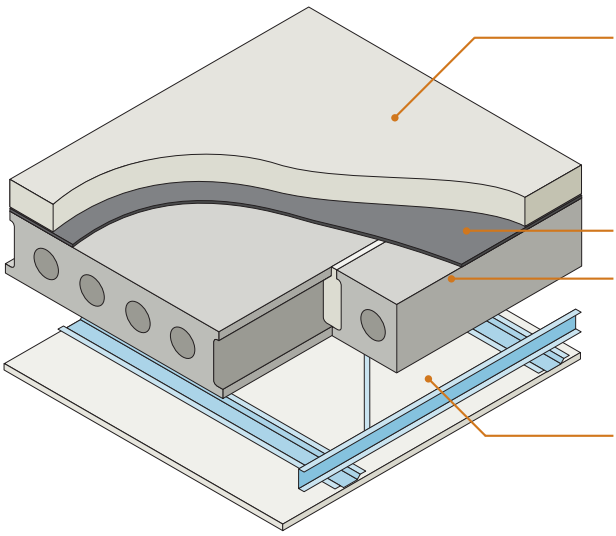

Sketch shows CT0 type ceiling treatment

Screed	65mm (min) cement:sand screed or 40mm (min) proprietary screed of nominal 80 kg/m² mass per unit area
Resilient layer	Regupol Quietlay
Structural floor	Precast concrete plank of 150mm (min) thickness and 300 kg/m² (min) mass per unit area
Ceiling	See section 3 for suitable ceiling treatment which is dependent on floor plank depth

SYSTEM INSTALLATION

The use of this screed resilient layer system **must** incorporate the following:

1) **Regupol Quietlay** (resilient layer to be laid over entire floor area)
2) **Regupol Quietlay** to be laid with min 100mm upstand at wall (to allow for isolation under wall lining and skirting after screed is poured)
3) All joints taped with Regupol Tape only

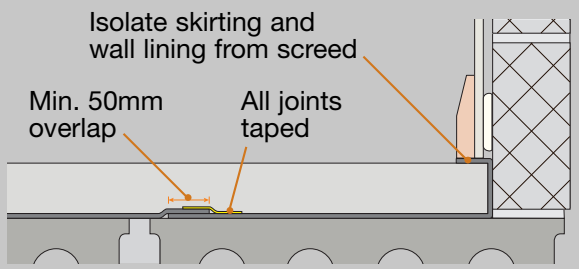

DO

- Butt planks tightly together
- Grout all joints between planks
- Fill all voids between walls and floor
- Ensure resilient layer is laid over entire floor surface with min 100mm upstand at perimeter walls
- Ensure that ‘Regupol’ is printed on the resilient layer material
- Ensure all joints are taped with Regupol Tape
- Ensure correct blocks are used in construction of external (flanking) walls
- Make sure ceiling treatment is installed in accordance with the manufacturer’s instructions (where applicable)

Robust Details Limited can only accept registration of this floor once the builder agrees to receive training from CMS Danskin on the installation of the screed and resilient layer. Please contact Robust Details Limited for further information.

1. External (flanking) wall junction

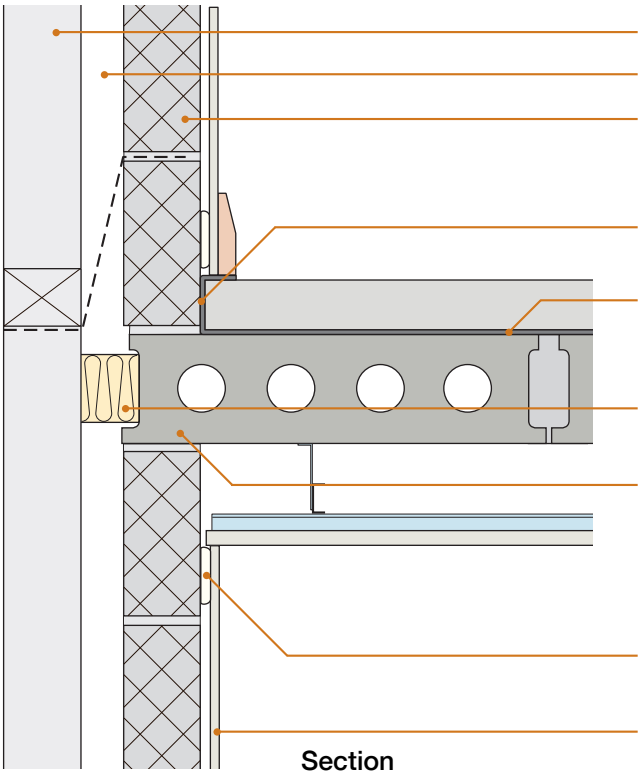

Section

- Masonry outer leaf
- External wall cavity (min 50mm)
- Inner leaf (min 100mm) aggregate concrete block (1350 kg/m³ to 1600 kg/m³ or 1850 - 2300 kg/m³)
- Regupol Quietlay to be laid with min 100mm upstand
- Regupol Quietlay resilient layer must have joints taped with Regupol Tape. See section 4
- Close cavity with a flexible cavity stop unless it is fully filled with mineral wool insulation
- Concrete planks must be built into walls:
  - walls must not be continuous between storeys
  - planks must not abut inner leaf
  - all voids between planks and blockwork filled with mortar or flexible sealant
- Continuous horizontal ribbon of adhesive
- Nominal 8 kg/m² gypsum-based board or 13mm plaster

Sketch shows CT0 type ceiling treatment

2. Separating wall junction

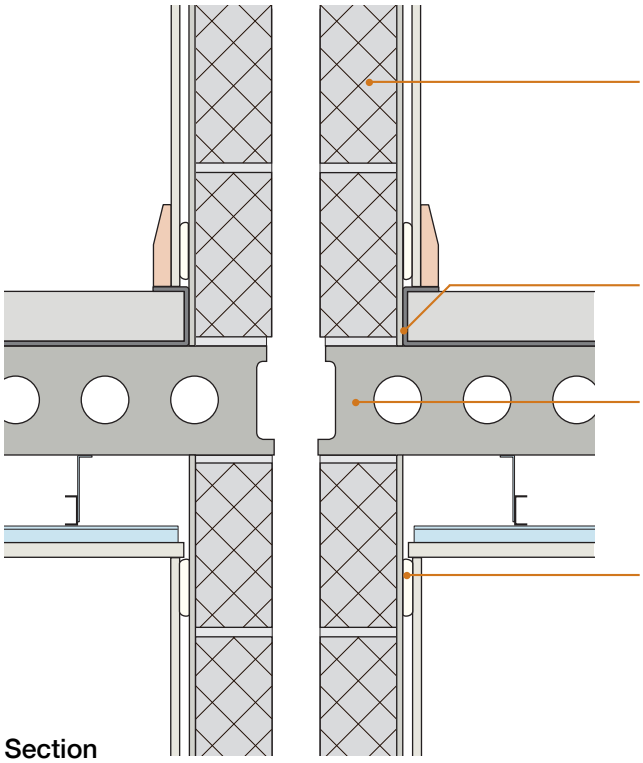

Section

- Separating wall:
  - if using robustdetails® for wall - refer to Table 3a in introduction to select an appropriate Robust Detail separating wall
  - if using wall requiring pre-completion testing – seek specialist advice
- Regupol Quietlay to be laid with min 100mm upstand
- Concrete planks to be built into wall:
  - wall must not be continuous between storeys
  - planks must not abut separating wall
  - all voids between planks and blockwork filled with mortar or flexible sealant
- Continuous horizontal ribbon of adhesive

Sketch shows CT0 type ceiling treatment

3. Ceiling treatments for E-FC-15

All ceiling treatments must be installed in accordance with the manufacturer's instructions. All ceiling joints must be sealed with tape or caulked with sealant.

Note: the sound insulation performance of all ceiling treatments is increased if:

- 25mm (min.) mineral fibre quilt is placed in the ceiling void, and/or
- resilient hangers are used.

Downlighters and recessed lighting

Provided there is a minimum ceiling void as stated below for CT0 or CT1, downlighters or recessed lighting may be installed in the ceiling:

- in accordance with the manufacturer's instructions
- at no more than one light per 2m² of ceiling area in each room or see Appendix F
- at centres not less than 0.75m
- into openings not exceeding 100mm diameter or 100x100mm

Particular attention should also be paid to Building Regulations Part B - Fire Safety

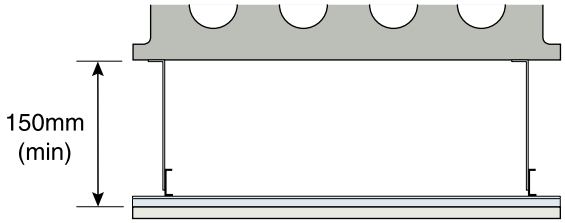

CT0 – Metal ceiling system - 150mm void
To be used for 150mm (min) depth concrete planks

- any metal ceiling system providing 150mm (min) ceiling void
- one layer of nominal 8 kg/m² gypsum-based board

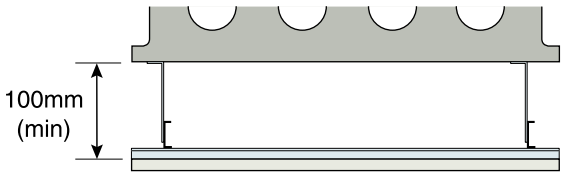

CT1 – Metal ceiling system - 100mm void
Only to be used for 200mm (min) depth concrete planks

- any metal ceiling system providing 100mm (min) ceiling void
- one layer of nominal 8 kg/m² gypsum-based board

4. Resilient layer installation for different screed types

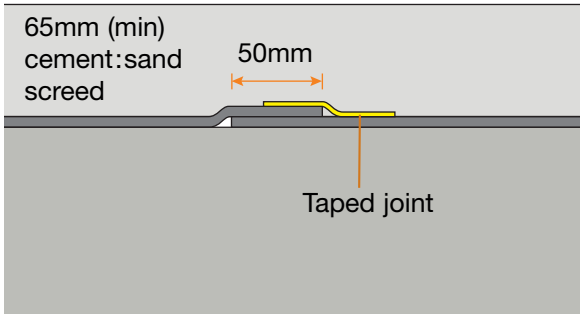

SCREED TYPE
65mm (min) cement:sand screed

- Resilient layer joints to be overlapped by 50mm (min)
- Resilient layer edge joints to be sealed by tape

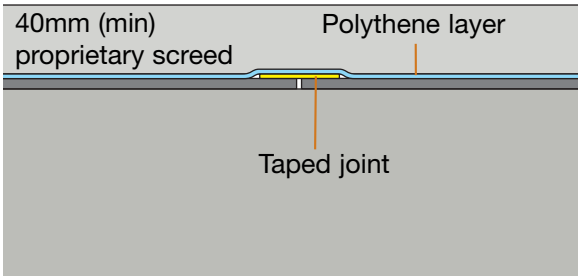

SCREED TYPE
40mm (min) proprietary screed

- Resilient layer joints to be butt jointed
- Resilient layer joints to be sealed by tape
- 500 gauge (min) polythene layer to be laid over whole floor overlapping joints

5. Underfloor heating systems within screeds

Underfloor heating systems (including connectors and fixings) installed within the screed must not penetrate the resilient layer or bridge the screed to the slab.

Underfloor heating systems which have a supporting layer/board may be laid on top of the Regupol Quietlay.

Appropriate screed depth cover to the heating system must be designed for – contact underfloor heating manufacturer for guidance.

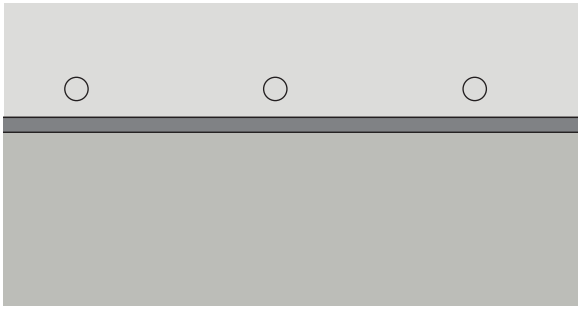

6. Services – Service pipes through separating floor

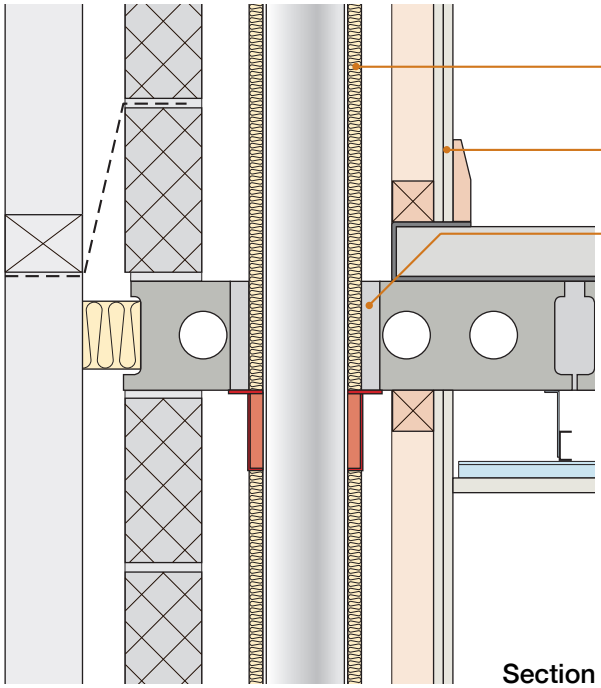

25mm (min) mineral wool quilt (min 10 kg/m^3) around pipe

Pipe boxed in with two layers gypsum-based board, each layer nominal 8 kg/m^2

All voids around pipe sealed

Section

Sketch shows CT0 type ceiling treatment

CHECKLIST (to be completed by site manager/supervisor)

Company:

Site:

Plot: Site manager/supervisor:

Ref.	Item	Yes (✔)	No (✔)	Inspected (initials & date)
1.	Has training been received from CMS Danskin			
2.	Are precast concrete planks 150mm (min) thick and of mass per unit area 300 kg/m² (min)?			
3.	Are inner leaves to external (flanking) walls of the correct block density?			
4.	Are joints between precast concrete planks grouted and sealed?			
5.	Are precast concrete planks built into the masonry walls?			
6.	Is the Regupol Quietlay covering the whole floor slab?			
7.	Is the Regupol Quietlay taken min 100mm up the wall?			
8.	Are all joints taped with Regupol Tape?			
9.	Are the skirting boards and wall linings isolated from the screed by the Regupol Quietlay?			
10.	Are all ceiling board joints sealed with tape or caulked with sealant?			
11.	Are service pipes wrapped in quilt and boxed in with two layers of nominal 8 kg/m² gypsum-based board?			
12.	Is separating floor satisfactorily complete?			

Contact details for technical assistance from CMS Danskin, supplier of Regupol Quietlay resilient layer system:

Telephone: 01925 577711 **E-mail:** info@cmsdanskin.co.uk

Notes (include details of any corrective action)

Site manager/supervisor signature . . . . . .

® UK registered trade mark no. 2291665

© Robust Details Limited 2011. All rights reserved. No part of this Handbook (other than the checklists) may be reproduced in any material form or issued or communicated to the public (including photocopying or storing it in any medium by electronic means, and whether or not transiently or incidentally to some other use of this Handbook) without the prior written permission of Robust Details Limited except in accordance with the provisions of the Copyright, Designs and Patents Act 1988.
Warning: the doing of an unauthorised act in relation to a copyright work may result in both a civil claim for damages and criminal prosecution.

3. Internal wall junction (non loadbearing)

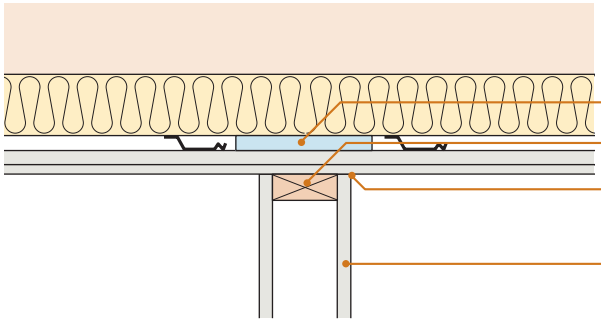

Resilient bar nogging

Headplate fixed to resilient bar nogging

Seal all perimeter joints with tape or caulk with sealant

Where required internal wall to comply with Building Regulations Requirement E2

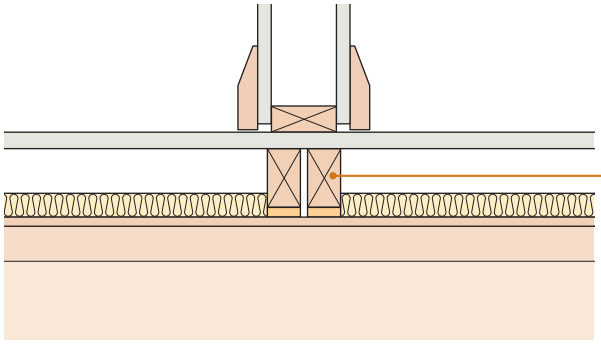

Additional support to partition (see Appendix A)

4. Internal wall junction (loadbearing)

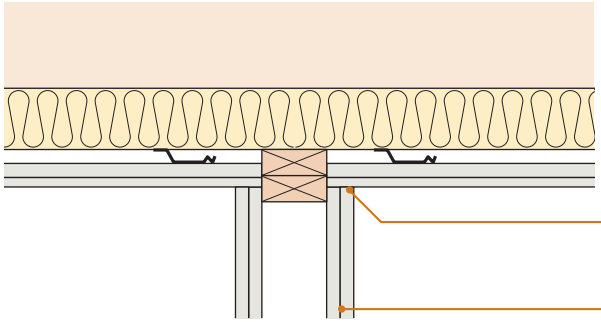

Seal all perimeter joints with tape or caulk with sealant

Where required internal wall to comply with Building Regulations Requirement E2

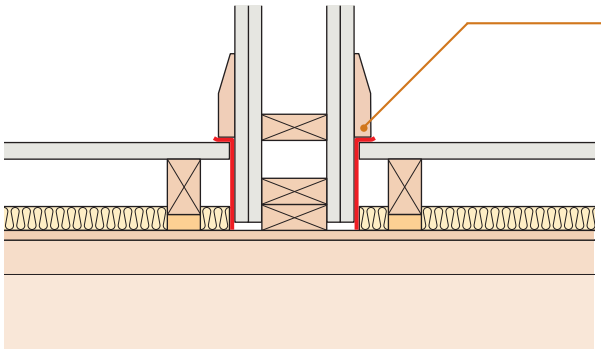

5mm (min) resilient flanking strip

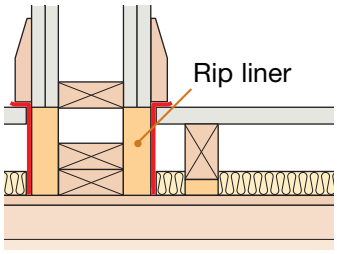

Alternative detail

5. Ceiling treatment for E-FT-1

Timber floor ceiling treatment must be either CT1 or CT2 (see below). All joints to outer layers of ceiling must be sealed with tape or caulked with sealant.

The maximum load on resilient bars should not exceed that specified in the manufacturer's instructions.

Ensure ceiling layers have staggered joints.

Services must not puncture ceiling linings (except cables, which should be sealed around with flexible sealant)

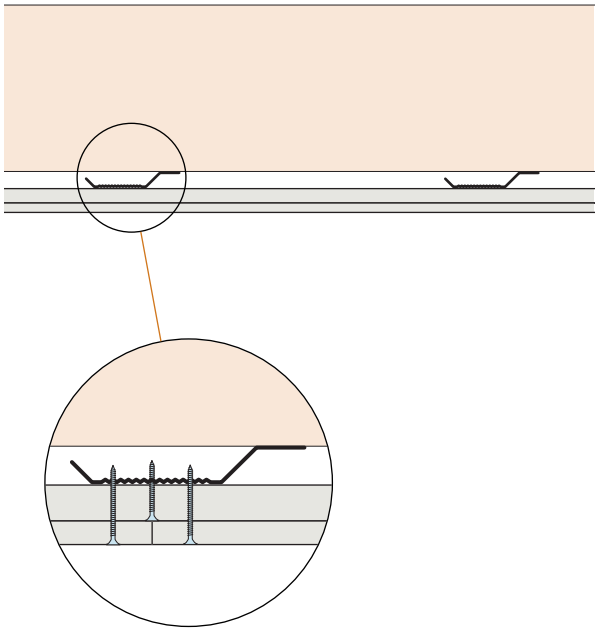

Downlighters and recessed lighting

Downlighters or recessed lighting may be installed in the ceiling:

- in accordance with the manufacturer's instructions
- at no more than one light per 2m^2 of ceiling area in each room unless the use of a greater density of light fittings is supported by testing undertaken in accordance with Appendix F
- at centres not less than 0.75m
- into openings not exceeding 100mm diameter or 100x100mm

Particular attention should also be paid to Building Regulations Part B - Fire Safety

Note: Only downlighters which have been satisfactorily assessed in accordance with the procedure described in Appendix F "*Determination of the acoustic performance of downlighters and recessed lighting in timber separating floors*" are acceptable.

CEILING BOARD FIXINGS MUST NOT PENETRATE OR TOUCH JOISTS

16mm (min) resilient bars with CT1 and CT2

16mm (min) metal resilient ceiling bars mounted at right angles to the joists at 400mm centres (bars must achieve a minimum laboratory performance of rdΔR_w+C_{tr}=11dB and rdΔL_w=13dB) – see Appendix E.

Ceiling treatment CT1

Two layers of gypsum-based board, composed of 19mm (nominal 13.5 kg/m^2) fixed with 32mm screws, and 12.5mm (nominal 10 kg/m^2) fixed with 42 mm screws.

Ceiling treatment CT2

Two layers of gypsum-based boards composed of 15mm (nominal 12.5 kg/m^2) fixed with 25mm screws and second layer of 15mm gypsum-based board (nominal 12.5 kg/m^2) fixed with 42mm screws.

7. Loadbearing internal wall perpendicular to joists

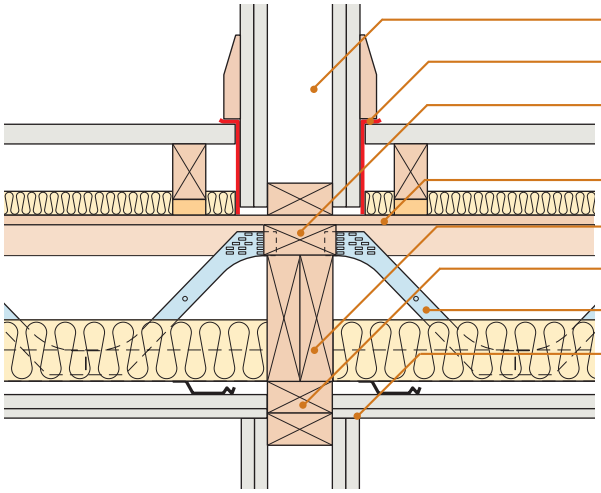

- Internal loadbearing wall
- 5mm (min) resilient flanking strip
- Softwood timber infill between supporting top chords/flanges where required
- Floor decking
- Internal wall beams
- Headplate fixed to internal wall beams
- Metal web joist (see joist type, page 1)
- Seal all perimeter joints with tape or caulk with sealant

Note: Detail shows top chord/flange supported

Alternative detail

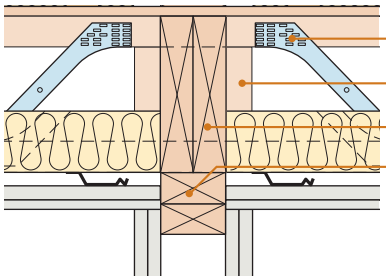

- Metal web joist (see joist type, page 1)
- Timber blocking to joist
- Internal wall beam
- Headplate fixed to internal wall beams

8. Loadbearing internal wall parallel to joists

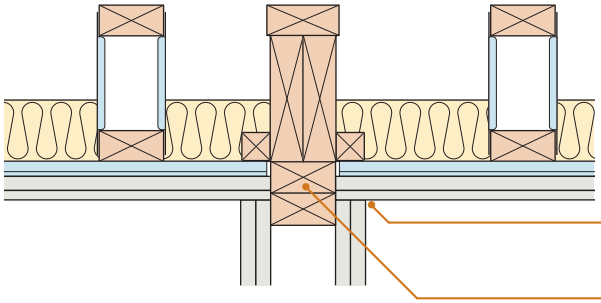

- Seal all perimeter joints with tape or caulk with sealant
- Headplate fixed to internal wall beams

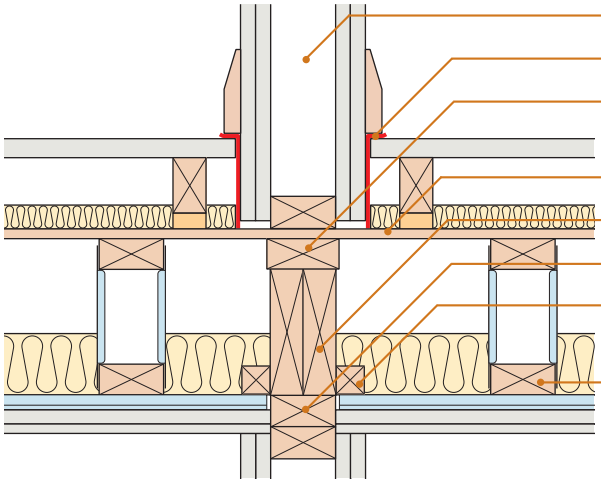

- Internal loadbearing wall
- 5mm (min) resilient flanking strip
- Softwood timber infill between supporting top chords/flanges where required
- Floor decking
- Internal wall beams
- Headplate fixed to internal wall beams
- Softwood timber noggings for resilient bar support (leave a small gap at end of resilient bar)
- Metal web joist (see joist type, page 1)

Note: Detail shows top chord/flange supported

9. Ceiling treatment for E-FT-3

Timber floor ceiling treatment must be either CT1 or CT2 (see below). All joints to outer layers of ceiling must be sealed with tape or caulked with sealant.

The maximum load on resilient bars should not exceed that specified in the manufacturer's instructions.

Ensure ceiling layers have staggered joints.

Services must not puncture ceiling linings (except cables, which should be sealed around with flexible sealant)

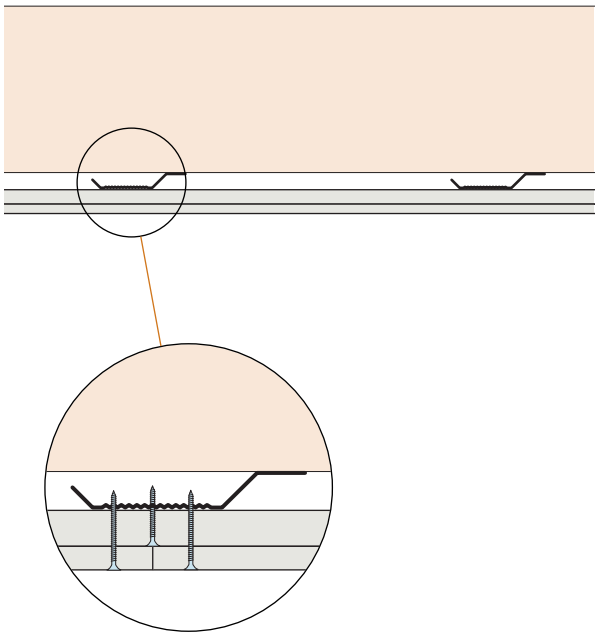

Downlighters and recessed lighting

Downlighters or recessed lighting may be installed in the ceiling:

- in accordance with the manufacturer's instructions
- at no more than one light per 2m² of ceiling area in each room unless the use of a greater density of light fittings is supported by testing undertaken in accordance with Appendix F
- at centres not less than 0.75m
- into openings not exceeding 100mm diameter or 100x100mm

Particular attention should also be paid to Building Regulations Part B - Fire Safety

Note: Only downlighters which have been satisfactorily assessed in accordance with the procedure described in Appendix F "*Determination of the acoustic performance of downlighters and recessed lighting in timber separating floors*" are acceptable.

CEILING BOARD FIXINGS MUST NOT PENETRATE OR TOUCH JOISTS

16mm (min) resilient bars with CT1 and CT2

16mm (min) metal resilient ceiling bars mounted at right angles to the joists at 400mm centres (bars must achieve a minimum laboratory performance of $rd\Delta R_w+C_{tr}$=11dB and $rd\Delta L_w$=13dB) – see Appendix E

Ceiling treatment CT1

Two layers of gypsum-based board, composed of 19mm (nominal 13.5 kg/m²) fixed with 32mm screws, and 12.5mm (nominal 10 kg/m²) fixed with 42 mm screws

Ceiling treatment CT2

Two layers of gypsum-based boards composed of 15mm (nominal 11.7 kg/m²) fixed with 25mm screws and second layer of 15mm gypsum-based board (nominal 11.7 kg/m²) fixed with 42mm screws

3. Internal wall junction (non loadbearing)

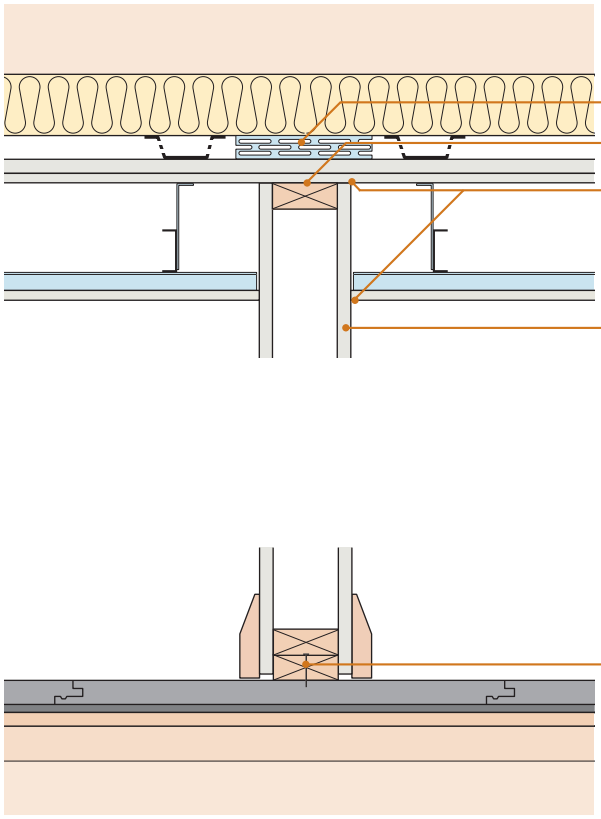

Resilient bar nogging

Headplate fixed to resilient bar nogging

Seal all perimeter joints with tape or caulk with sealant

Where required, internal wall to comply with Building Regulations Requirement E2

Non loadbearing partitions fixed at the head-plate to the primary ceiling should be lined with gypsum based board within the suspended ceiling void. Alternatively partitions may terminate at the completed soffit of the secondary ceiling. Attention is drawn to Building Regulations Requirements B1 and B3

Ensure fixings do not penetrate the resilient layer

4. Internal wall junction (loadbearing)

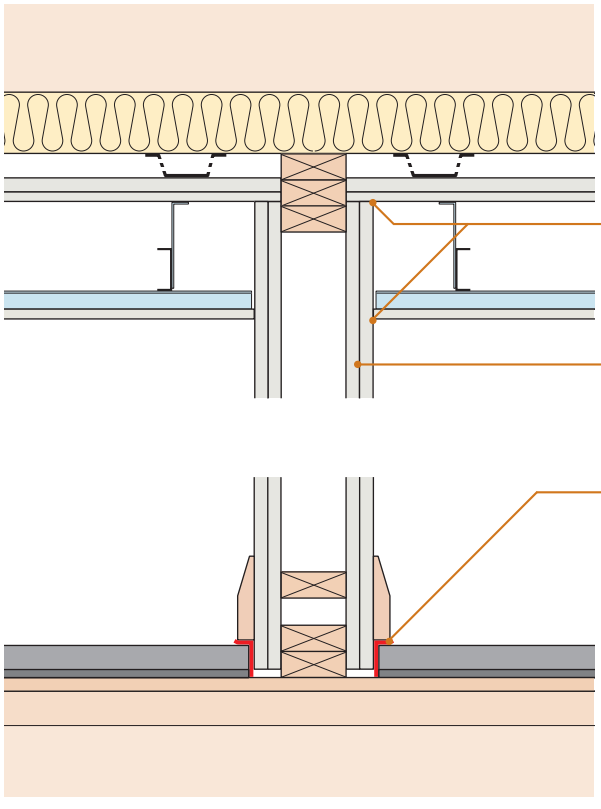

Seal all perimeter joints with tape or caulk with sealant

Where required, internal wall to comply with Building Regulations Requirement E2

YELO*fon*® FS50 flanking angle

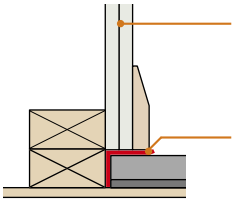

Two layers gypsum-based board nominal 8 kg/m² each layer

YELO*fon*® FS50 flanking angle

Alternative detail

5. Ceiling treatment for E-FT-5

- The maximum load on resilient bars should not exceed that specified in the manufacturer's instructions
- Ensure ceiling layers have staggered joints.
- Services must not puncture ceiling linings (except cables, which should be sealed around with flexible sealant)

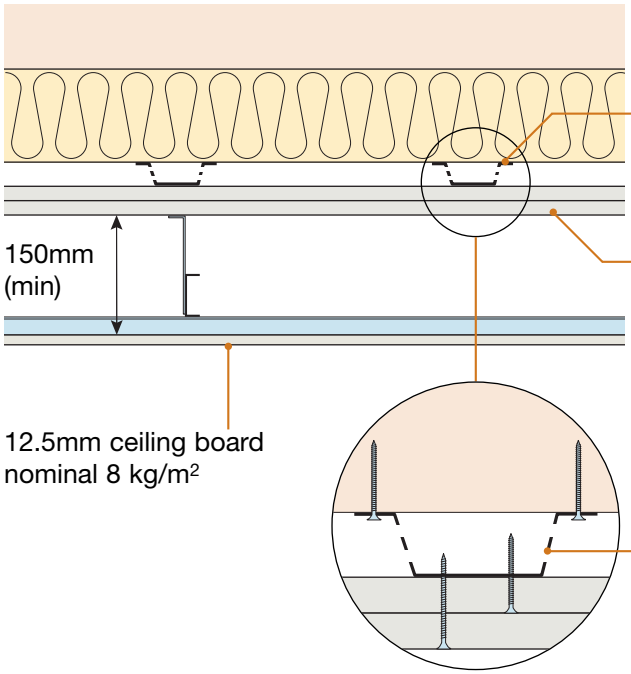

Cellecta® HP30 30mm deep metal resilient bar fixed perpendicular to floor joists at 600mm (max) centres

Two layers of 15mm gypsum-based boards (nominal 12.5 kg/m² each)

Cellecta® HP30 30mm resilient bar

CEILING BOARD FIXINGS MUST NOT PENETRATE OR TOUCH JOISTS

Ceiling treatment

Cellecta® HP30 resilient bar fixed perpendicular to floor joists at 600mm (max) centres.

Alternative resilient bars must be a minimum of 27mm deep and achieve a minimum laboratory performance of rdΔR_w+C_{tr}=16dB and rdΔL_w=16dB) - see Appendix E

Two layers of gypsum-based boards composed of 15mm (nominal 12.5 kg/m²) fixed with 25mm screws and second layer of 15mm gypsum-based board (nominal 12.5 kg/m²) fixed with 42mm screws.

Secondary ceiling formed below 150mm void with 12.5mm (min) gypsum based board (nominal 8 kg/m²)

Downlighters and recessed lighting

Downlighters or recessed lighting may be installed in the second ceiling:

- in accordance with the manufacturer's instructions
- at no more than one light per 2m² of ceiling area in each room unless the use of a greater density of light fittings is supported by testing undertaken in accordance with Appendix F
- at centres not less than 0.75m
- into openings not exceeding 100mm diameter or 100x100mm

Particular attention should also be paid to Building Regulations Part B - Fire Safety

7. Loadbearing internal wall perpendicular to joists

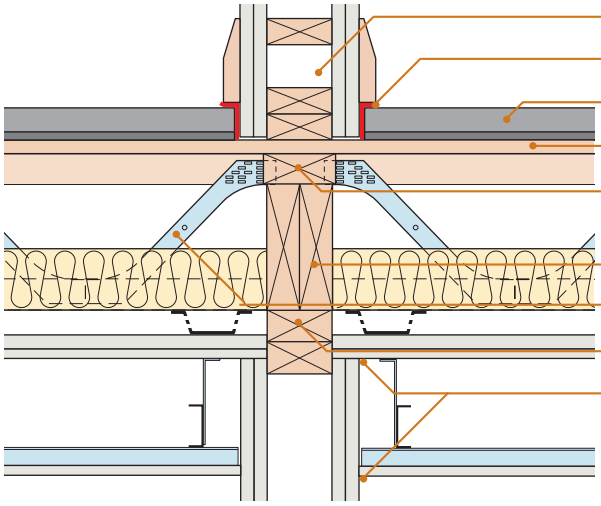

- Internal loadbearing wall
- YELO*fon*® FS50 flanking angle
- ScreedBoard® 28
- Floor decking
- Softwood timber infill between supporting top chords/flanges where required
- Internal wall beams
- Metal web joist (see joist type, page 1)
- Headplate fixed to internal wall beams
- Seal all perimeter joints with tape or caulk with sealant

Note:

Main detail shows top chord/flange supported

Alternative detail shows bottom chord supported

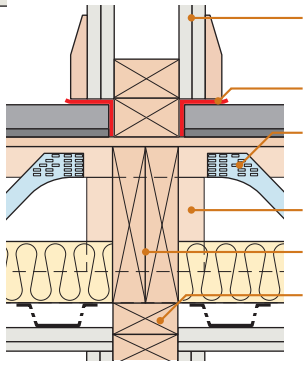

- Two layers gypsum-based board nominal 8 kg/m^2 each layer
- YELO*fon*® FS50 flanking angle
- Metal web joist (see joist type, page 1)
- Timber blocking to joist
- Internal wall beams
- Headplate fixed to internal wall beams

Alternative detail

8. Loadbearing internal wall parallel to joists

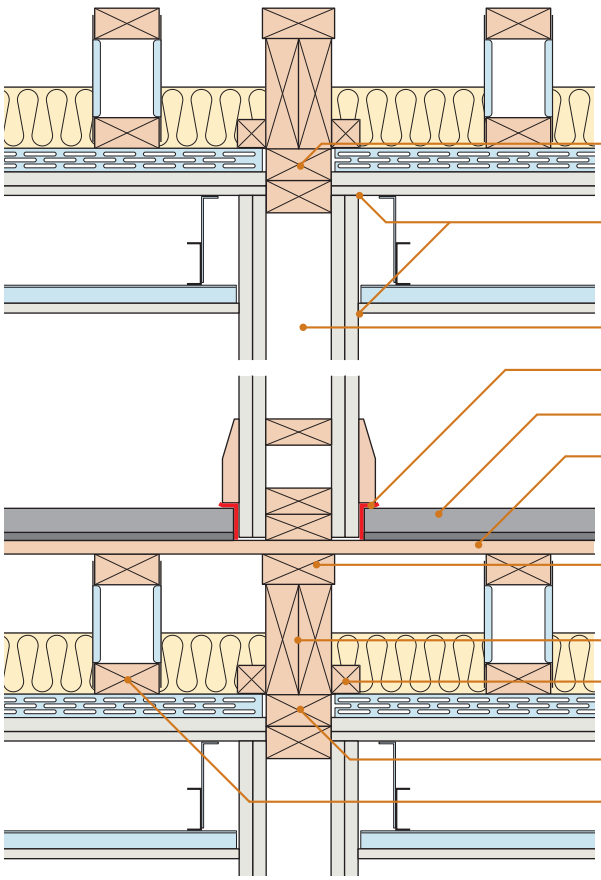

- Headplate fixed to internal wall beams
- Seal all perimeter joints with tape or caulk with sealant
- Internal loadbearing wall
- YELO*fon*® FS50 flanking angle
- ScreedBoard® 28
- Floor decking
- Softwood timber infill between supporting top chords/flanges where required
- Internal wall beams
- Softwood timber noggings for resilient bar support (leave a small gap at end of resilient bar)
- Headplate fixed to internal wall beams
- Metal web joist (see joist type, page 1)

Note: Detail shows top chord/flange supported.

9. Ceiling treatment for E-FT-6

- The maximum load on resilient bars should not exceed that specified in the manufacturer's instructions
- Ensure ceiling layers have staggered joints.
- Services must not puncture ceiling linings (except cables, which should be sealed around with flexible sealant)

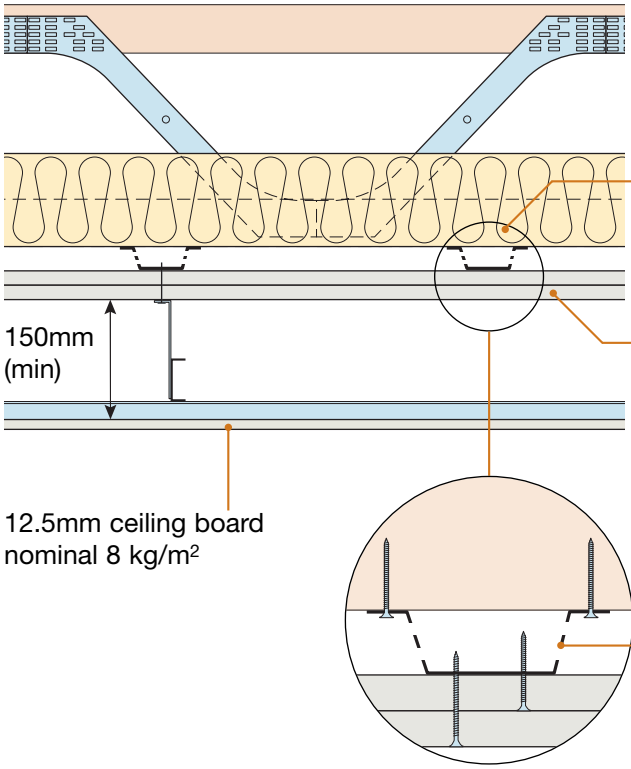

Cellecta® HP30 30mm deep metal resilient bar fixed perpendicular to floor joists at 600mm (max) centres

Two layers of 15mm gypsum-based boards (nominal 12.5 kg/m² each)

Cellecta® HP30 30mm resilient bar

CEILING BOARD FIXINGS MUST NOT PENETRATE OR TOUCH JOISTS

Ceiling treatment

Cellecta® HP30 resilient bar fixed perpendicular to floor joists at 600mm (max) centres.

Alternative resilient bars must be a minimum of 27mm deep and achieve a minimum laboratory performance of rdΔR_w+C_{tr}=16dB and rdΔL_w=16dB) - see Appendix E.

Two layers of gypsum-based boards composed of 15mm (nominal 12.5 kg/m²) fixed with 25mm screws and second layer of 15mm gypsum-based board (nominal 12.5 kg/m²) fixed with 42mm screws.

Secondary ceiling formed below 150mm void with 12.5mm (min) gypsum based board (nominal 8 kg/m²).

Downlighters and recessed lighting

Downlighters or recessed lighting may be installed in the second ceiling:

- in accordance with the manufacturer's instructions
- at no more than one light per 2m² of ceiling area in each room unless the use of a greater density of light fittings is supported by testing undertaken in accordance with Appendix F
- at centres not less than 0.75m
- into openings not exceeding 100mm diameter or 100x100mm

Particular attention should also be paid to Building Regulations Part B - Fire Safety.

3. Separating wall junction

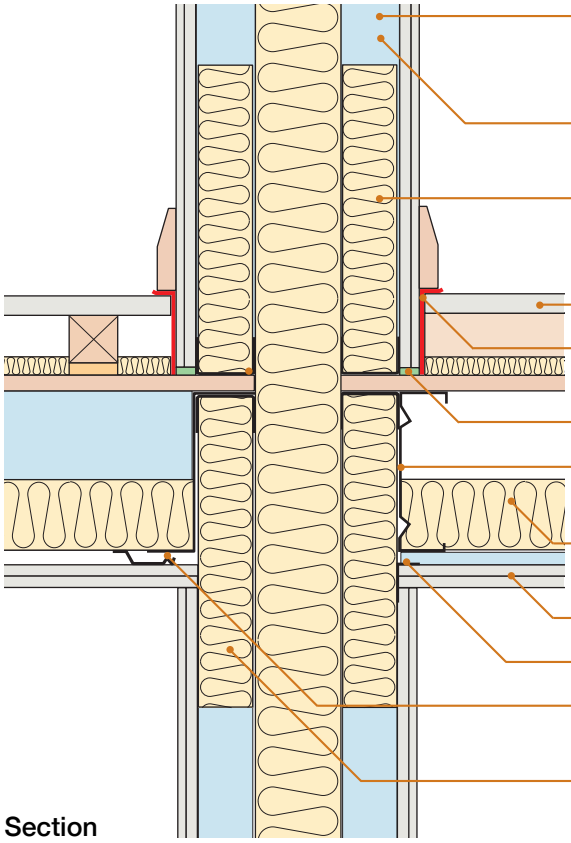

Section

If using robustdetails® for wall - refer to Table 3c in Introduction to select an appropriate robustdetails® separating wall

If using wall requiring pre-completion testing - seek specialist advice

Mineral wool insulation batts, 33-60 kg/m³, between studs to 600mm (min) above bottom rail of steel frame

Floating floor treatment (see section 6)

5mm (min) resilient flanking strips installed at perimeter and turned under skirting board

Flexible acoustic sealant below plasterboard

225mm (min) deep UltraBEAM metal joists with 22mm water resistant t&g floor decking

100mm mineral wool insulation quilt - 10-36 kg/m³ (min) or Cellecta MICRO 50

Ceiling treatment (see section 5)

Fixing angle

Resilient bar below joists at 450mm centres fixed through joist flange to manufacturer's detail

Mineral wool insulation batts, 33-60 kg/m³, between studs to 600mm (min) below decking level

4. Internal wall junction

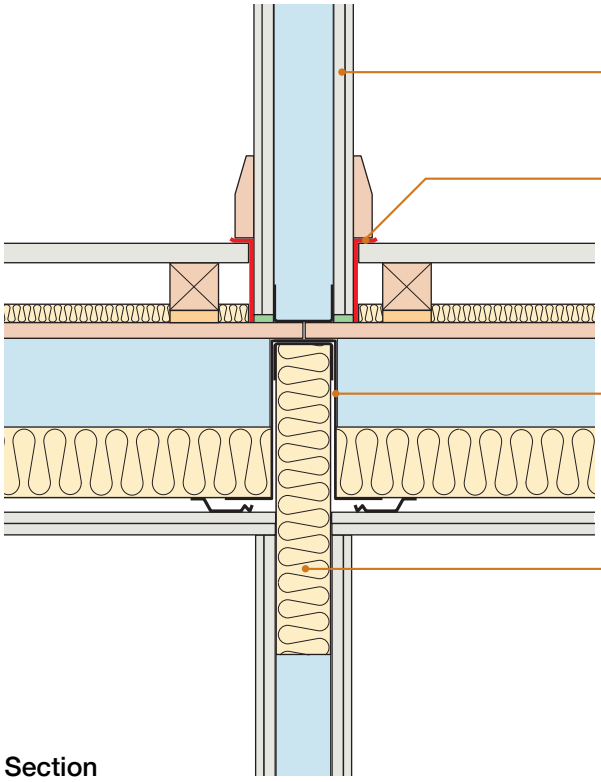

Section

2 layers of gypsum-based board nominal 20 kg/m² combined, joints to be staggered and taped

5mm (min) resilient flanking strip

Lipped 'Zed' floor support by Hadley Group

Mineral wool insulation batts, 33-60 kg/m³, between studs to 600mm (min) below decking level

5. Ceiling treatment for E-FS-2

Metal floor ceiling treatment must be as shown below. All joints to outer layers of ceiling must be sealed with tape or caulked with sealant.

The maximum load on resilient bars should not exceed that specified in the manufacturer's instructions.

Ensure ceiling layers have staggered joints.

Services must not puncture ceiling linings (except cables, which should be sealed around with flexible sealant)

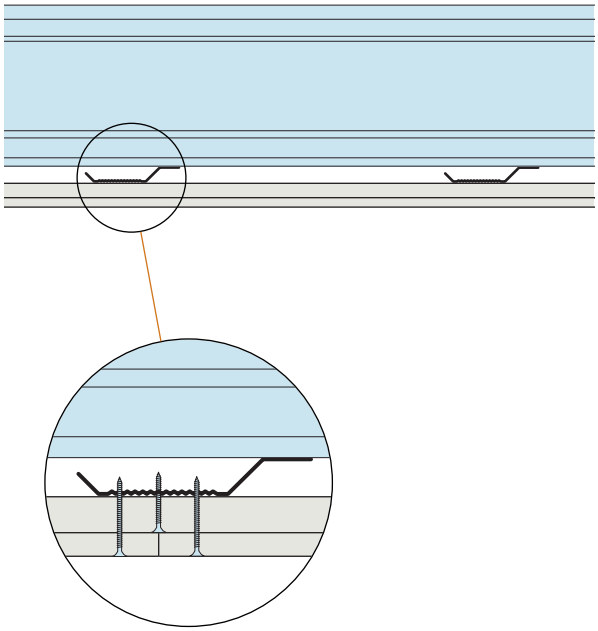

Downlighters and recessed lighting

Downlighters or recessed lighting may be installed in the ceiling:

- in accordance with the manufacturer's instructions
- at no more than one light per 2m^2 of ceiling area in each room unless the use of a greater density of light fittings is supported by testing undertaken in accordance with Appendix F
- at centres not less than 0.75m
- into openings not exceeding 100mm diameter or 100x100mm

Particular attention should also be paid to Building Regulations Part B - Fire Safety

Note: Only downlighters which have been satisfactorily assessed in accordance with the procedure described in Appendix F "*Determination of the acoustic performance of downlighters and recessed lighting in lightweight separating floors*" are acceptable.

CEILING BOARD FIXINGS MUST NOT PENETRATE OR TOUCH JOISTS

16mm (min) resilient bars with CT1 and CT2

16mm (min) metal resilient ceiling bars mounted at right angles to the joists at 450mm centres (bars must achieve a minimum laboratory performance of rdΔR_w+C_{tr}=11dB and rdΔL_w=13dB) – see Appendix E

Ceiling treatment CT1

Two layers of gypsum-based board, composed of 19mm (nominal 13.5 kg/m^2) fixed with 32mm screws, and 12.5mm (nominal 10 kg/m^2) fixed with 42 mm screws

Ceiling treatment CT2

Two layers of gypsum-based boards composed of 15mm (nominal 12.5 kg/m^2) fixed with 25mm screws and second layer of 15mm gypsum-based board (nominal 12.5 kg/m^2) fixed with 42mm screws

3. Internal wall junction

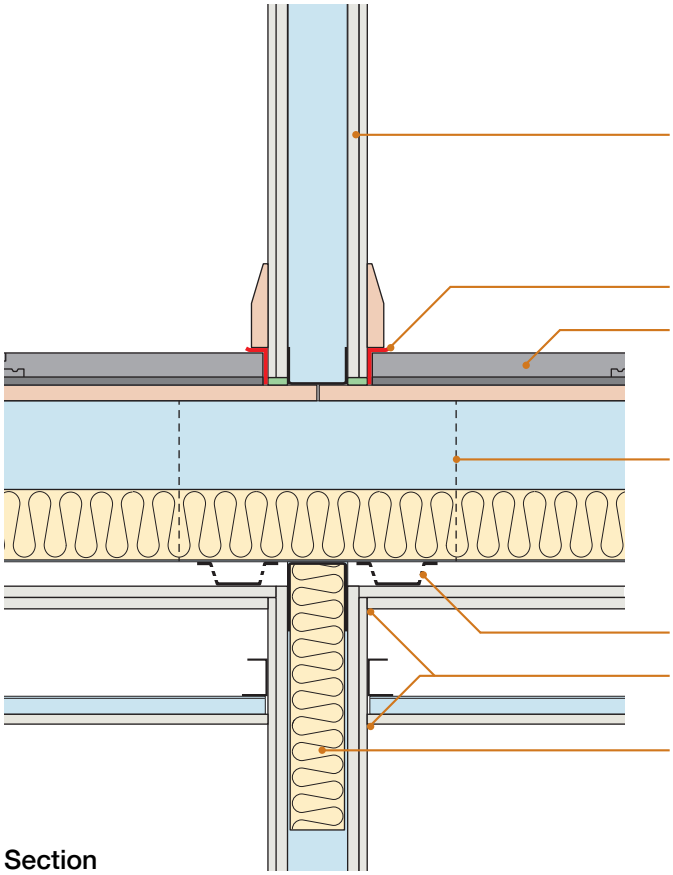

Section

4. Ceiling treatment for E-FS-3

- The maximum load on resilient bars should not exceed that specified in the manufacturer's instructions
- Ensure ceiling layers have staggered joints.
- Services must not puncture ceiling linings (except cables, which should be sealed around with flexible sealant)

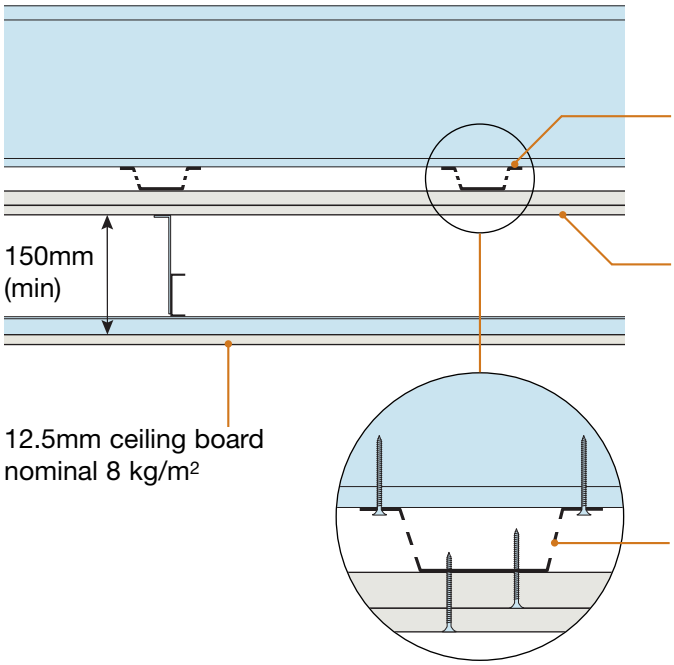

Cellecta® HP30 30mm deep metal resilient bar fixed perpendicular to floor joists at 600mm (max) centres

Two layers of 15mm gypsum-based boards (nominal 12.5 kg/m² each)

Cellecta® HP30 30mm resilient bar

CEILING BOARD FIXINGS MUST NOT PENETRATE OR TOUCH JOISTS

Ceiling treatment

Cellecta® HP30 resilient bar fixed perpendicular to floor joists at 600mm (max) centres.

Alternative resilient bars must be a minimum of 27mm deep and achieve a minimum laboratory performance of rdΔR_w+C_{tr}=16dB and rdΔL_w=16dB) - see Appendix E.

Two layers of gypsum-based boards composed of 15mm (nominal 12.5 kg/m²) fixed with 25mm screws and second layer of 15mm gypsum-based board (nominal 12.5 kg/m²) fixed with 42mm screws.

Secondary ceiling formed below 150mm void with 12.5mm (min) gypsum based board (nominal 8 kg/m²).

Downlighters and recessed lighting

Downlighters or recessed lighting may be installed in the second ceiling:

- in accordance with the manufacturer's instructions
- at no more than one light per 2m² of ceiling area in each room unless the use of a greater density of light fittings is supported by testing undertaken in accordance with Appendix F
- at centres not less than 0.75m
- into openings not exceeding 100mm diameter or 100x100mm

Particular attention should also be paid to Building Regulations Part B - Fire Safety.

Appendix A2 – Specific Flanking Conditions

Contents

Section	Page
Icopal-MONARFLOOR® BRIDGESTOP® System for robustdetails® masonry cavity walls	2
Smartroof complete Interlocking “room-in-roof” panel system using robustdetails® timber or masonry cavity walls	3
Kingspan TEK inner leaf flanking condition for robustdetails® timber separating walls	4
Icopal-MONARFLOOR® Wall Cap RDA2 System for robustdetails® separating floors with cavity flanking walls	5
RoofSpace I-Roof™ “room-in-roof” panel system using robustdetails® timber or masonry cavity walls	6
Space4 “room-in-roof” panel system using robustdetails® timber or masonry cavity walls	7
Donaldson Timber Systems Single Leaf Spandrel Panel System for robustdetails® timber separating walls	8
NTSROOF *RAPID FIT SYSTEM* for robustdetails® timber or masonry cavity walls	9
Lightweight external cladding for robustdetails® timber separating walls	10
Flanking construction to robustdetails® precast concrete separating floors around private stairs	11
Nu-Span and Spantherm pre-insulated ground floor concrete slabs for use on robustdetails® cavity separating walls	15
Detail for supporting flanking walls above porches in timber frame houses	16

Appendix A2 – Specific Flanking Conditions

Icopal-MONARFLOOR® BRIDGESTOP® System for robustdetails® cavity masonry walls. Refer to Table 6 in Introduction.

1. Separating wall – direct support on raft

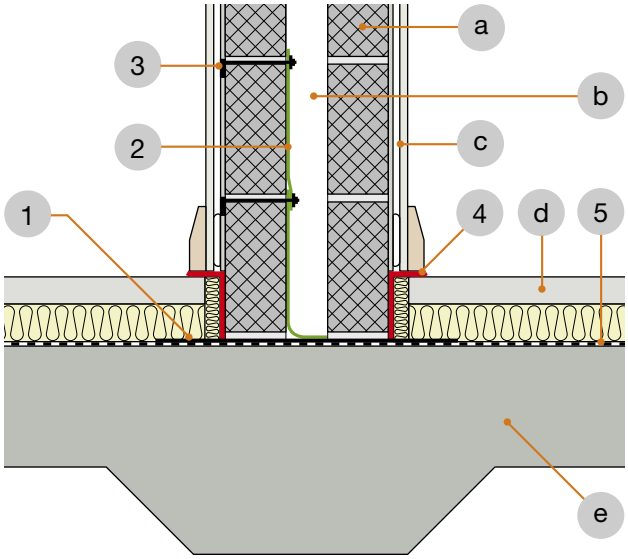

2. Separating wall – suspended floor with gas membrane

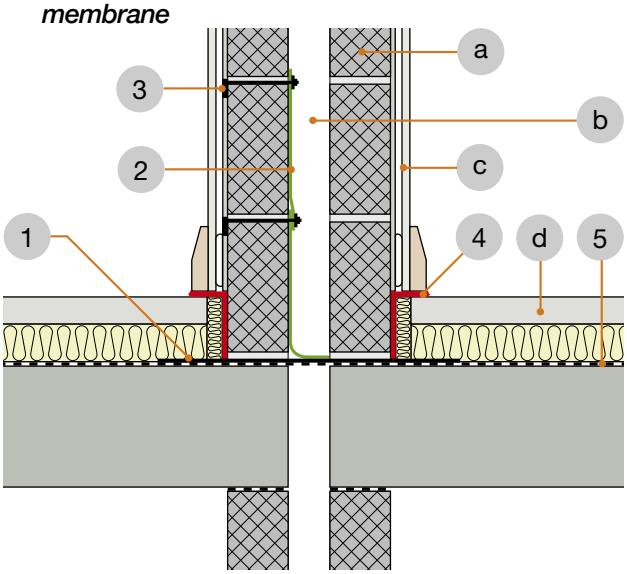

3. Insulated raft foundation

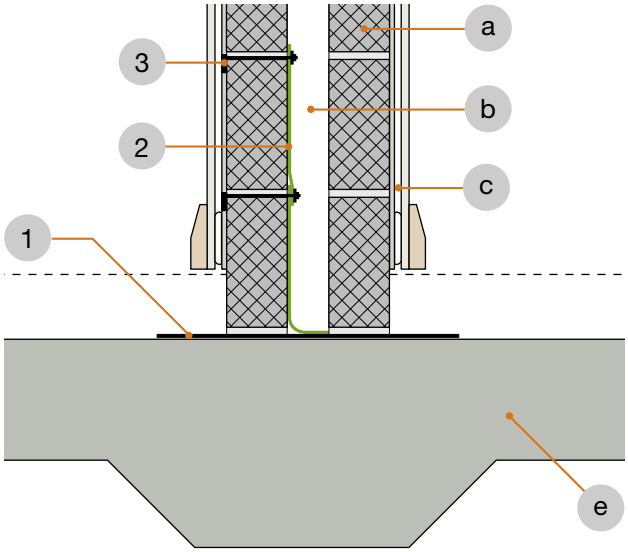

4. Stepped foundation

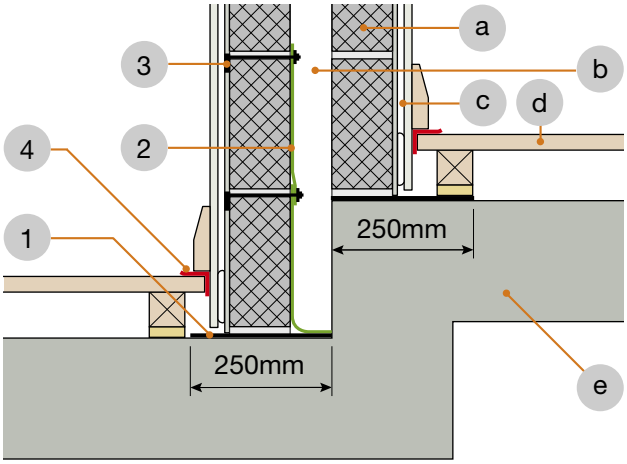

Key

1 500mm wide (or 250mm where shown) MONARFLOOR® BRIDGESTOP® 3mm HP Acoustic Membrane laid under the party wall over the dpm. This is an integral part of the system.

2 MONARFLOOR® BRIDGESTOP® Quilt in two lifts to prevent mortar droppings touching both masonry leaves.

3 MONARFLOOR® BRIDGESTOP® Tie to penetrate at max 450mm centres. Ties are reversible. May also be used as render depth marker.

4 MONARFLOOR® 6mm Flanking Band forming a 90° angle to isolate floating floor treatment from separating wall blocks, lining and skirting board.

5 Continuous dpm over the raft where ground gasses are an issue. Contact Icopal for specification.

BRIDGESTOP® is the subject of Patent Application ref GB2429719

a Min 100mm block (with appropriate Type A wall ties) dependent on Robust Detail being used. Refer to Table 6a in the Introduction.

b Min 75mm or 100mm cavity width dependent on Robust Detail being used.

c Wall finish dependent on Robust Detail used.

d Floating screed on insulation; or timber floating floor types FFT2 resilient cradle and batten, FFT3 resilient batten, or FFT4 deep platform system.

e 150mm (min) thick insitu concrete 365 kg/m² (min) mass per unit area or Insulslab SFRC.

Contact details for Icopal-MONARFLOOR®:

Telephone: 0161 866 6540
Fax: 0161 865 8433
E-mail: acoustics.uk@icopal.com

The trade marks MONARFLOOR and BRIDGESTOP are the subject of UK trade mark registrations owned by Icopal Limited

Appendix A2 – Specific Flanking Conditions

Smartroof complete "room-in-roof" panel system using robustdetails® timber or masonry cavity walls. Refer to Table 6 in Introduction.

1. Gable flanking junction – masonry

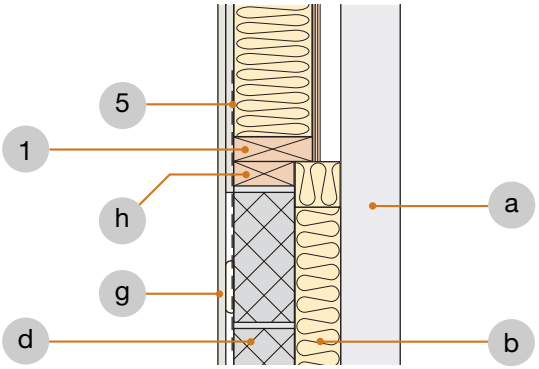

2. Room-in-roof junction with masonry cavity walls

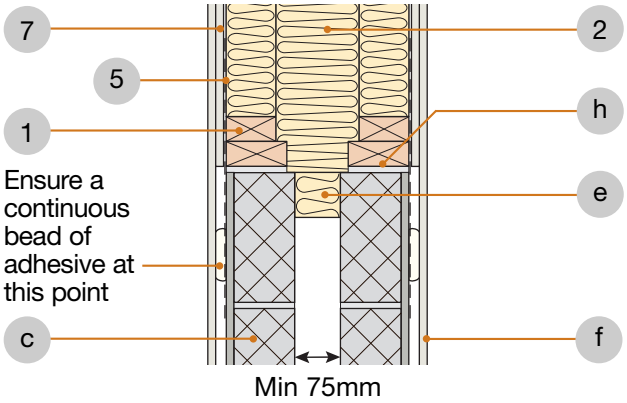

3. Gable flanking junction – timber frame

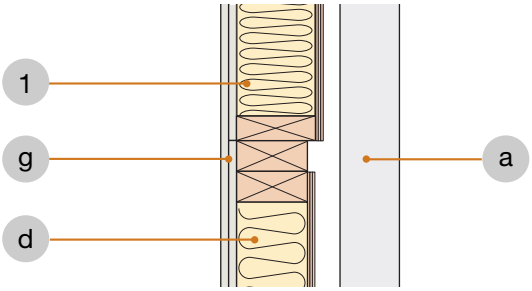

4. Room-in-roof junction with timber frame cavity walls

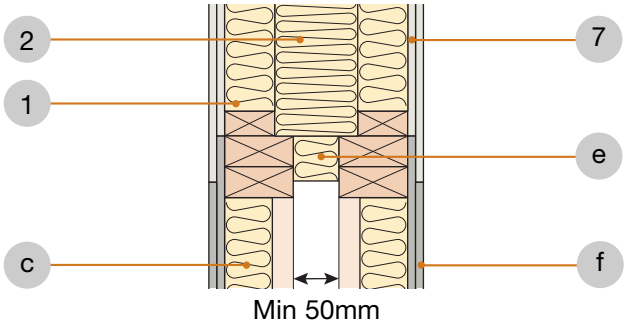

5. Separating wall – roof

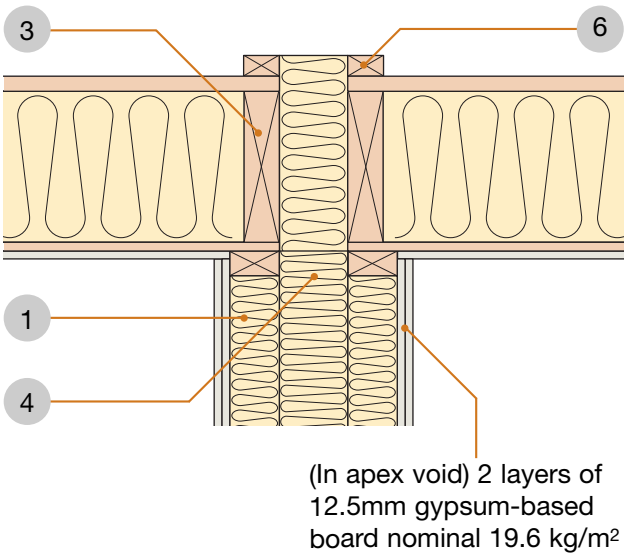

Key

1 Smartroof panel.

2 Breather membrane-encased insulation cushion, fully filling the cavity.

3 Smartroof roof panel.

4 125x265mm flexible cavity closer by Smartroof.

5 Vertical metal straps by Smartroof.

6 25x50mm counterbattens by Smartroof.

7 2 layers min.12.5mm gypsum-based board total 19.6 kg/m² to cover spandrel and wall plate.

a Outer leaf of external wall.

b Continue cavity batts up to gable end if required.

c Refer to relevant robustdetails® separating wall.

d Inner leaf dependent on Robust Detail being used.

e Flexible cavity closer.

f Gypsum-based board(s) as specified on robustdetails® separating wall.

g Gypsum-based board nominal 8 kg/m². 2 layers required where separating floors are used (refer to robustdetails® separating floor).

h 100x50mm wall plate on nominal 10mm mortar bed. Ensure no gaps remain.

Contact details for Smartroof Limited:

Telephone: 01283 200 199
E-mail: info@smartroof.co.uk
Web: www.smartroof.co.uk

Appendix A2 – Specific Flanking Conditions

Kingspan TEK inner leaf flanking condition for robustdetails® timber separating walls. Refer to Table 6 in Introduction. *Currently when used with separating floors in apartments, separating floors will require pre-completion testing.*

1. External (flanking) wall junction

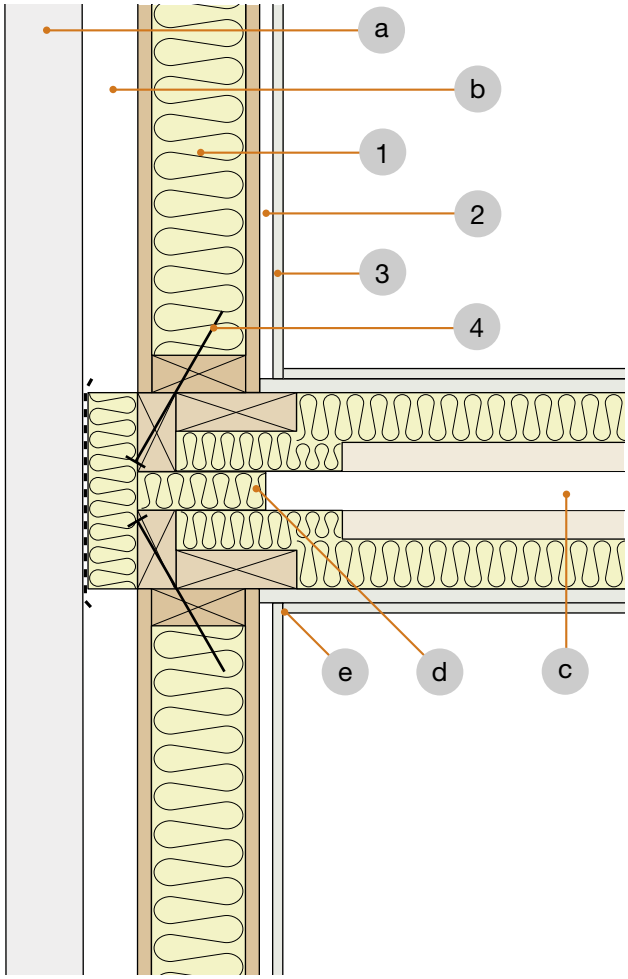

2. Staggered external (flanking) wall junction

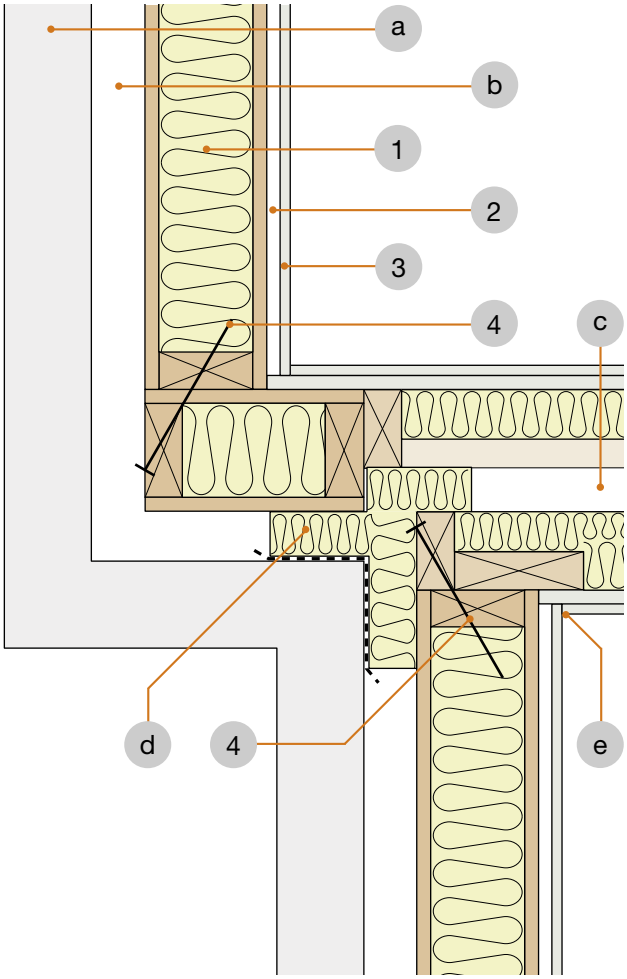

Key

1 Kingspan TEK – 142 Panel.

2 Service void (if required).

3 One layer of gypsum-based board nominal 8 kg/m² on inner leaf where there is no separating floor, e.g. for houses.

Two layers of gypsum-based board nominal 8 kg/m² each on inner leaf where there is a separating floor (non-robustdetails® floor), e.g. for flats and apartments.

4 Approved fixings to TEK BBA Cert No. 02/S029.

a Masonry outer leaf (min 100mm thick).

b External wall cavity (min 50mm).

c robustdetails® timber frame separating wall. (Refer to Table 6 in Introduction and relevant timber frame Robust Details in Handbook).

d Close cavity with flexible cavity stop (see Appendix A).

e Seal all joints with tape or caulk with sealant.

Contact details for Kingspan TEK,
Kingspan Insulation Limited:

Telephone: 01544 387382
Fax: 01544 387482
E-mail: technical.uk@tek.kingspan.com
Web: www.tek.kingspan.com

Appendix A2 – Specific Flanking Conditions

Icopal-MONARFLOOR® Wall Cap RDA2 System for robustdetails® separating floors in conjunction with cavity walls. Refer to Table 6 in Introduction.

1. External (flanking) wall junction

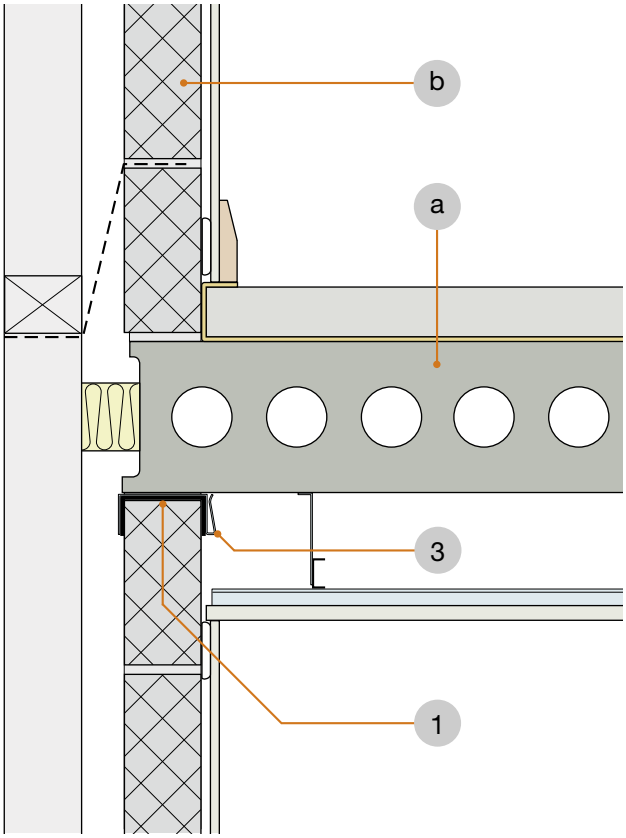

2. Separating wall junction

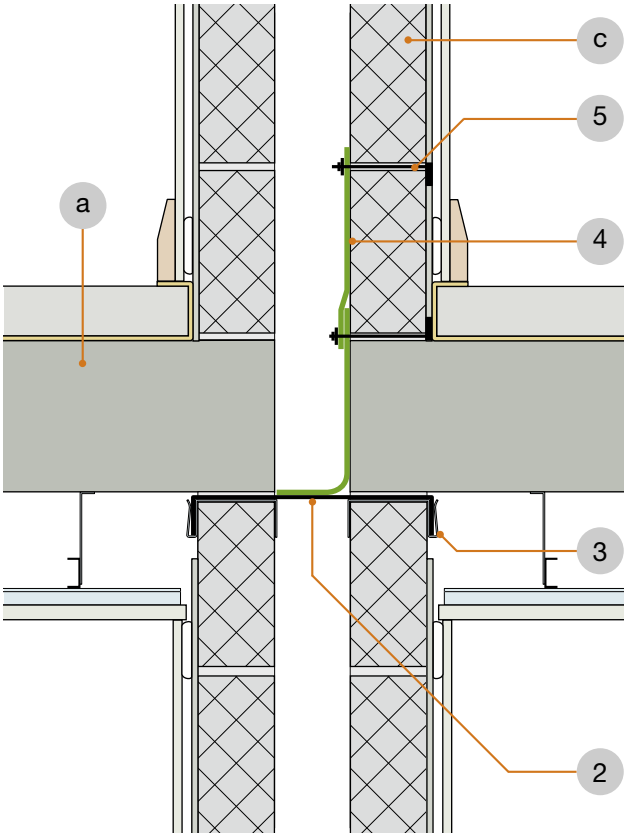

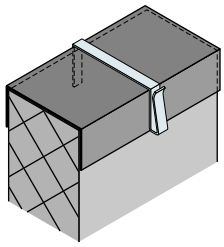

Wall Cap 200 and Wall Cap Clip

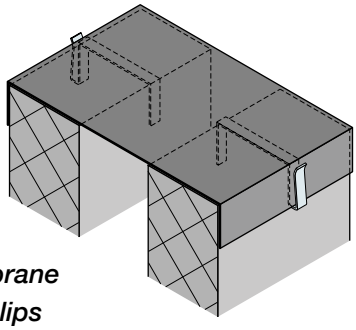

Wall Cap RDA2 Membrane and Wall Cap RDA2 Clips

When applying this system to forms of construction other than masonry, please refer to manufacturer's installation guides. Note: In these cases, not all components shown above may be required.

Key

1 3.5mm MONARFLOOR® Wall Cap 200 laid as continuous layer on external (flanking) wall.

2 3.5mm MONARFLOOR® Wall Cap RDA2 Membrane laid as continuous layer on separating wall.

3 Wall Cap RDA2 Clips.

4 MONARFLOOR® RDA2 Quilt in two lifts to prevent mortar droppings touching both masonry leafs.

5 MONARFLOOR® RDA2 Tie to penetrate at max 450mm centres. Ties are reversible and may also be used as render depth gauges.

a robustdetails® separating floor. Refer to Table 6 in Introduction.

b External (flanking) wall. Refer to floor Robust Detail for specification.

c Separating wall. If using robustdetails® separating wall refer to Table 3a in Introduction.

Contact details for Icopal-MONARFLOOR®:

Telephone: 0161 866 6540
Fax: 0161 865 8433
E-mail: acoustics.uk@icopal.com

The trade marks MONARFLOOR and Wall Cap are the subject of UK trade mark registrations owned by Icopal Limited

Appendix A2 – Specific Flanking Conditions

RoofSpace I-Roof™ "room-in-roof" panel system using robustdetails® timber or masonry cavity walls. Refer to Table 6 in Introduction.

1. Room-in-roof junction with timber frame cavity walls

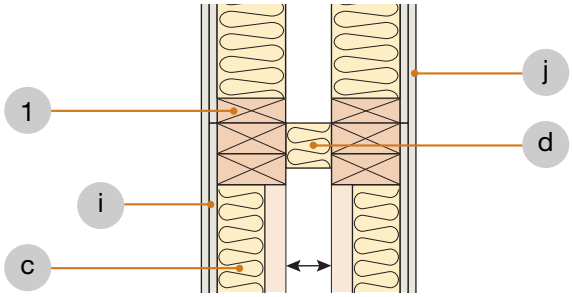

Min 50mm

2. Room-in-roof junction with masonry cavity walls

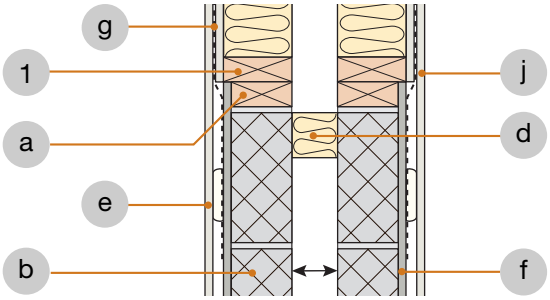

Min 75mm

3. Separating wall – roof junction

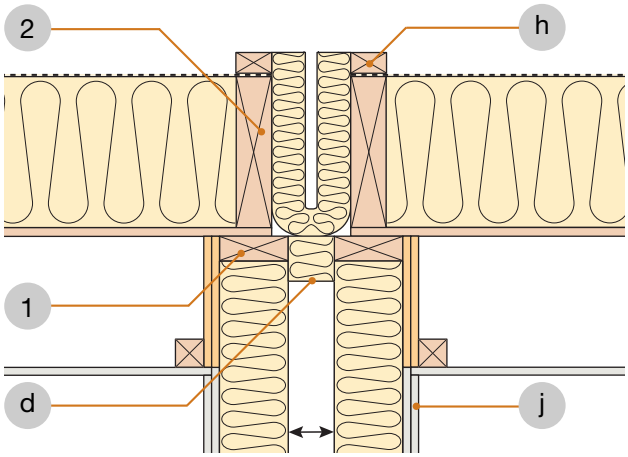

Min 50mm

4. Internal floor cassette junction option

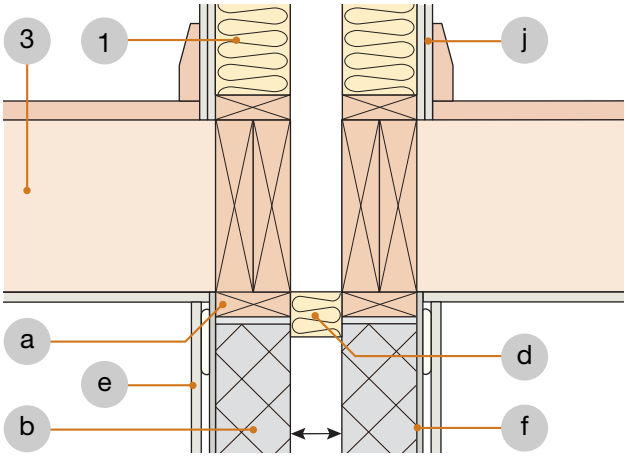

Min 75mm

5. Separating wall – roof junction – stepped terrace

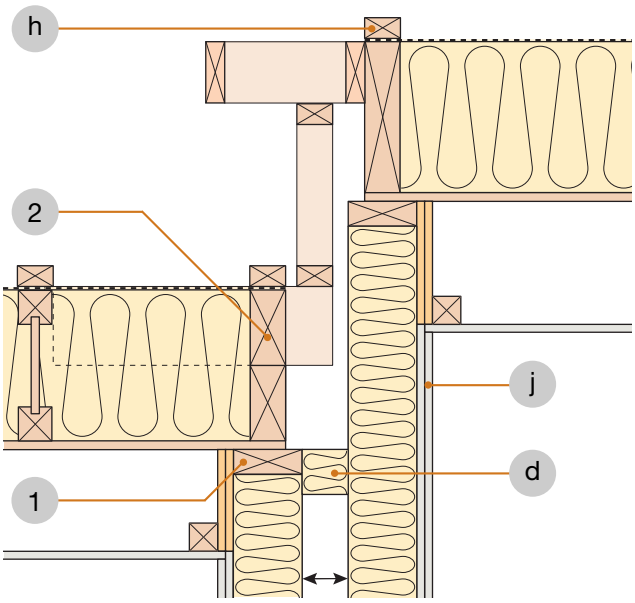

Min 50mm

Key

1 RoofSpace I-Roof™ spandrel panel.

2 RoofSpace I-Roof™ roof panel.

3 RoofSpace internal floor cassette.

a Timber wall plate bedded on 10mm mortar bed to take out unevenness in blockwork.

b Minimum 100mm blockwork.

c Timber frame separating wall leaf.

d Cavity closer.

e Gypsum-based board dependent on Robust Detail being used.

f Nominal 8mm render coat (refer to relevant robustdetails® separating wall).

g Vertical metal straps at 1200mm centres if required.

h 25 x 38mm counterbatten.

i 2 layers gypsum-based board total nominal 22 kg/m^2.

j 2 layers gypsum-based board total minimum 19.6 kg/m^2.

Spandrel panel cavity insulation (optional)

The cavity between the spandrel panels may be insulated with mineral wool rolls or batts with a density of 18-40 kg/m^3. Ensure insulation thickness is no greater than 10mm wider than cavity width to avoid excessive compression of the insulation.

Contact details for Roofspace Solutions:

Telephone: 01789 768000
E-mail: technical@roofspacesolutions.co.uk
Web: www.roofspacesolutions.co.uk

Appendix A2 – Specific Flanking Conditions

Space4 “room-in-roof” panel system using robustdetails® timber or masonry cavity walls. Refer to Table 6 in Introduction.

1. Non room-in-roof spandrel panel to timber separating wall junction

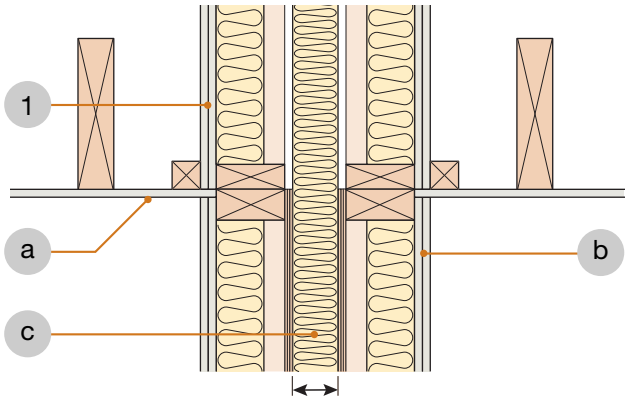

Min 50mm

2. Spandrel panel to masonry separating wall junction

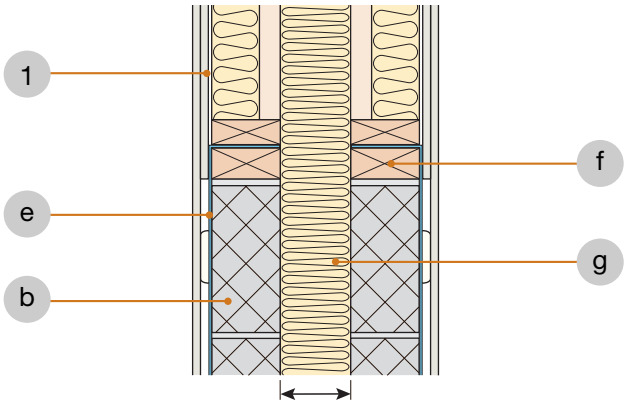

Min 100mm

3. Roof cassette to timber separating wall junction for room-in-roof

a) OSB on lower face

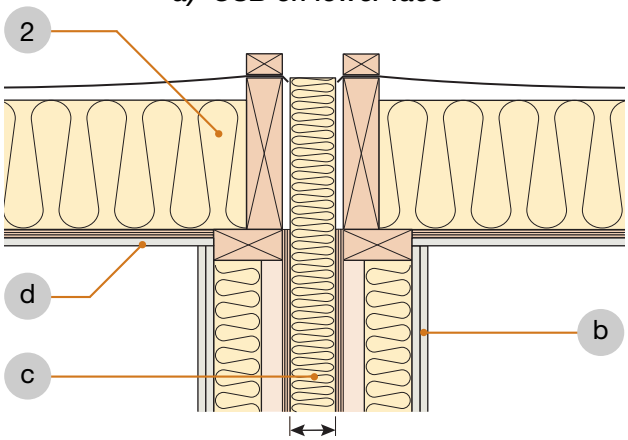

Min 50mm

b) OSB on upper face

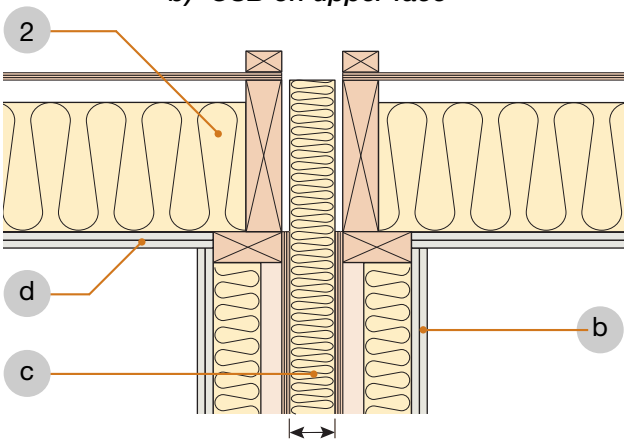

Min 50mm

Key

1 Space4 spandrel panel.

2 Space4 roof cassette.

a Minimum 1 layer nominal 8 kg/m² gypsum-based board to ceiling.

b robustdetails® separating wall.

c Mineral wool 18-40 kg/m³.

d OSB underdraw overlaid with minimum 1 layer gypsum-based board nominal 16 kg/m² total or 2 layers of gypsum-based board nominal 16 kg/m² total.

e Vertical metal straps at 1200mm centres if required.

f Wall plate fully bedded on mortar with no gaps.

g Mineral wool 12-25 kg/m³.

4. Internal floor junction for room-in-roof

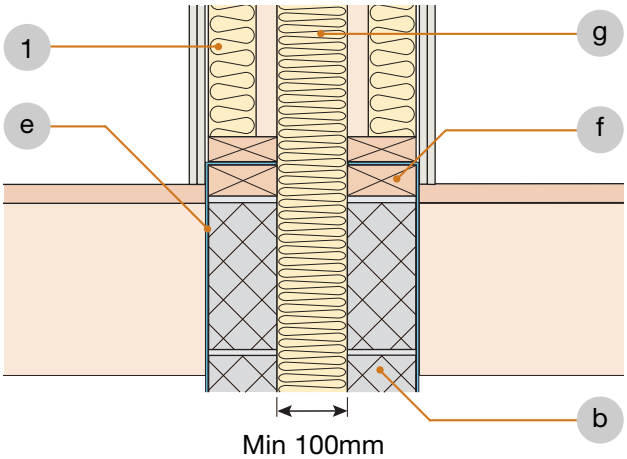

Min 100mm

Contact details for Space4:

Telephone: 0121 748 8383
Fax: 0121 776 7369
E-mail: technical@space4.co.uk
Web: www.space4.co.uk

Appendix A2 – Specific Flanking Conditions

Donaldson Timber Systems Single Leaf Spandrel Panel System for use on robustdetails® timber separating walls in non room-in-roof situations.
Refer to Table 6 in Introduction.

1. Spandrel panel located parallel to trussed rafters

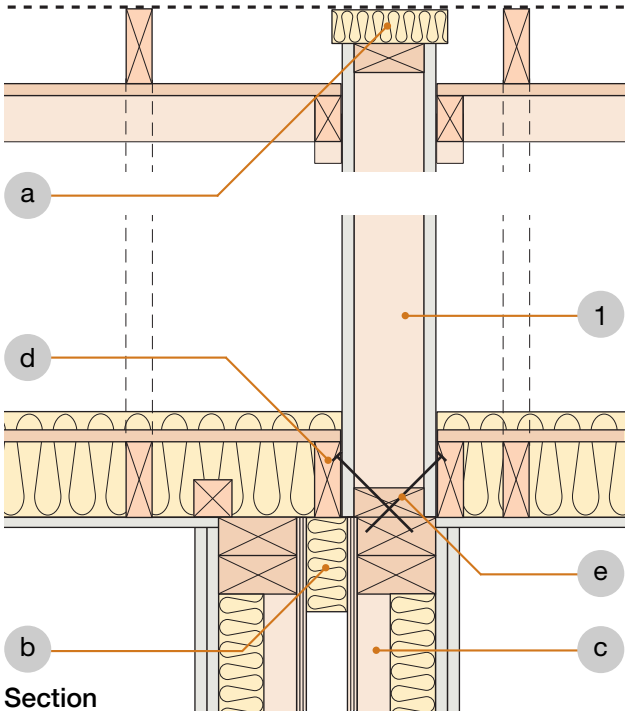

Section

2. Spandrel panel located across trussed rafters

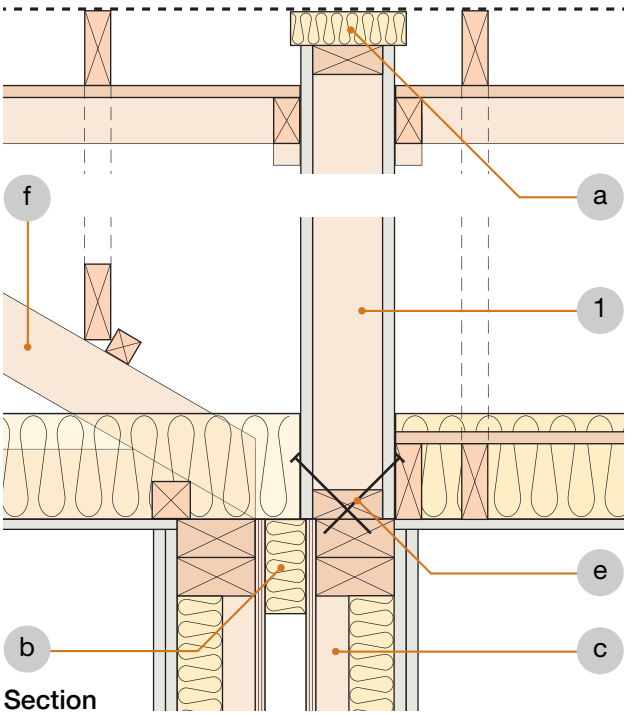

Section

3. Spandrel panel joint detail
Panels secured together using angled screw fixings

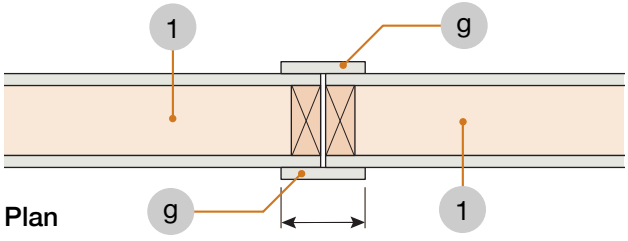

Plan

Min 100mm

Key

1 Donaldson Timber Systems Single Leaf Spandrel Panel System.

a Mineral wool closer.

b Flexible cavity stop.

c Timber frame separating wall.

d Site-fixed runners must not contact both wall leafs.

e Angled screw fixings to secure spandrel to wall head.

f Trusses and rafters must not contact both wall leafs.

g Gypsum board cover strip.

Refer also to manufacturer's guidance

Contact details for
Donaldson Timber Systems Limited:

Telephone: 0845 009 2774
Email: help@donaldsontimbersystems.com
Web: www.donaldsontimbersystems.com

Appendix A2 – Specific Flanking Conditions

NTSROOF *RAPID FIT SYSTEM* for **robust**details® timber or masonry cavity walls for "room-in-roof" situations. Refer to Table 6 in Introduction.

1. Room-in-roof junction with timber cavity walls

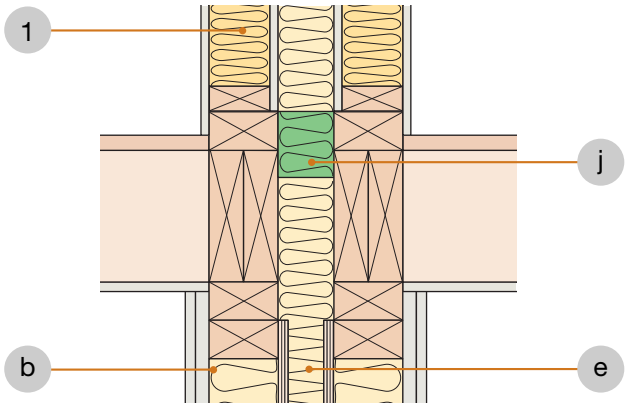

2. Room-in-roof junction with masonry cavity walls

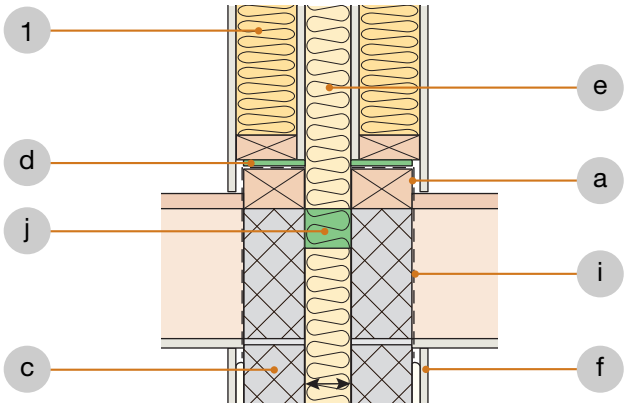

Min 75mm

3. Separating wall – roof junction

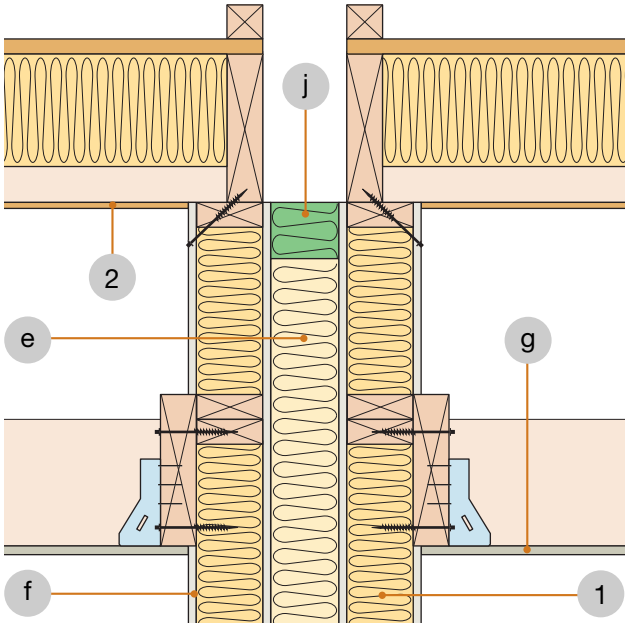

4. Room-in-roof lining requirements

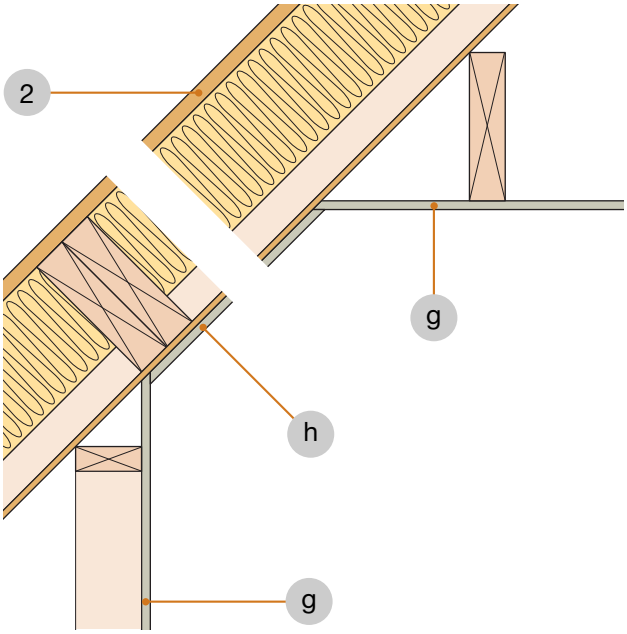

Key

a Wall plate bedded on mortar (notched to take straps where these are required).

b Timber robustdetails® wall (see Table 6 in Introduction).

c Blockwork dependent on Robust Detail used.

d Intumescent sealant.

e Mineral wool roll or batt 40 kg/m^3 (max).

f Gypsum-based board (nominal 10 kg/m^2).

g Gypsum-based board (nominal 8 kg/m^2)

h Min. 1 layer gypsum-based board (nominal 10 kg/m^2).

i Vertical metal straps if required. Straps must not extend into the cavity.

j Cavity closer if required for other Regulations.

1 **NTS**ROOF spandrel panel.

2 **NTS**ROOF roof cassette.

Contact details for National Timber Systems:

Telephone: 01609 751111
Fax: 01609 788388
E-mail: george.rayden@nationaltimbersystems.co.uk
Web: www.nationaltimbersystems.co.uk

Appendix A2 – Specific Flanking Conditions

Lightweight external cladding treatments for robustdetails® timber separating walls. Refer to Table 6 in Introduction. *Currently when used with separating floors in apartments, separating floors will require pre-completion testing.*

External (flanking) wall junction

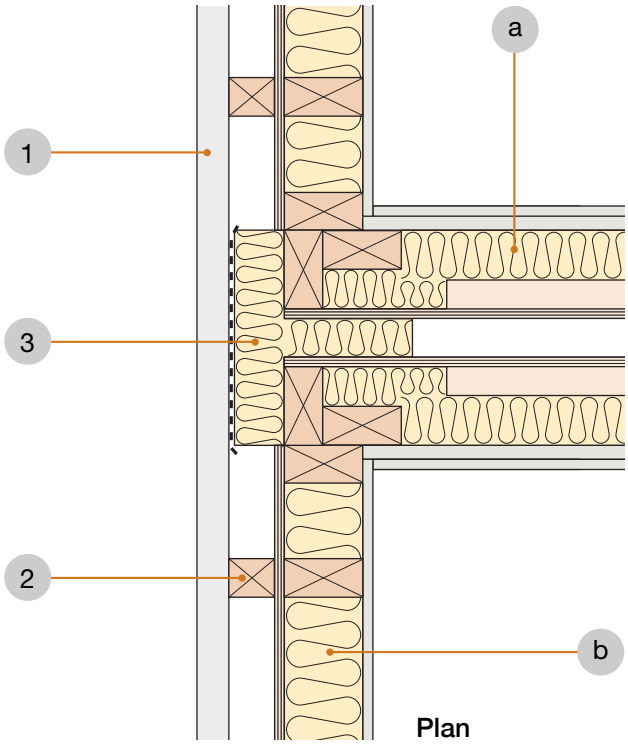

Plan

Key

1 Cladding system (see Table below).

2 Cladding support rails (timber or metal). Horizontal rails fixed directly to the wall structure must not be continuous across the separating wall.

3 Flexible cavity closer to fully close the cavity behind the cladding.

a Separating wall. See chosen Robust Detail for specification.

b Inner leaf of external wall. See chosen Robust Detail for specification.

Acceptable cladding types	
Render board	Systems having minimum 9mm rigid render board with minimum mass per unit area of 12.4 kg/m^2. It is acceptable to have multiple board layers.

Appendix A2 – Specific Flanking Conditions

Flanking construction guidance for **robust**details® precast concrete separating floors around private stairs, where there are two flats (one above the other) and where stairs being open to the upper flat prevents the flanking condition published in the floor Robust Detail from being fully constructed. See Table 6b in the Introduction.

Typical stair arrangement

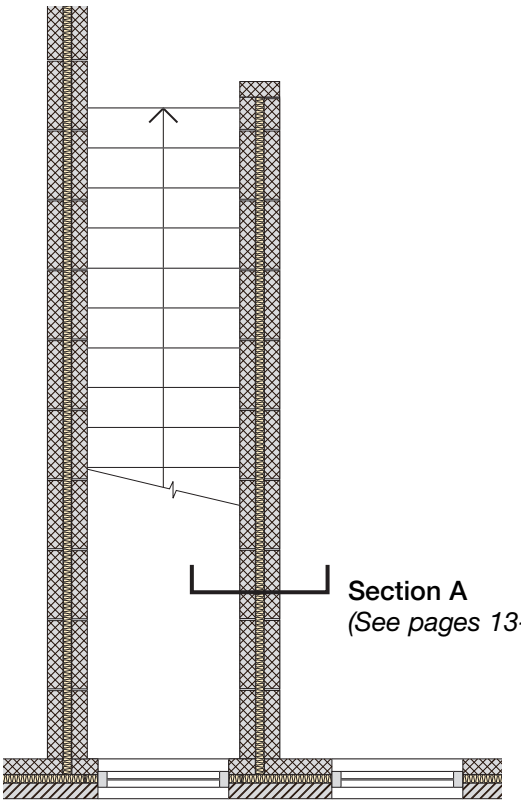

First floor plan

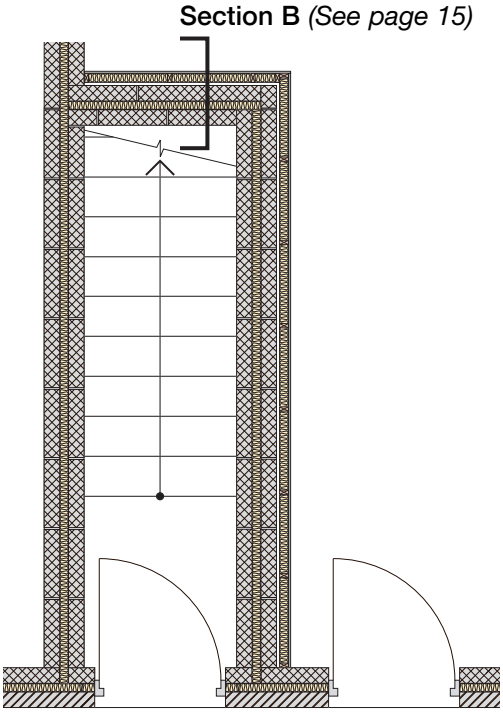

Ground floor plan

Stair soffit treatment - applies to both timber and concrete stairs

Stair landing

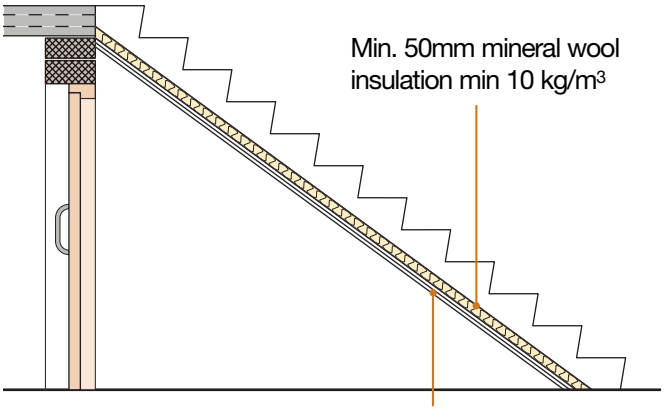

Cupboard under stairs

Stair landing



Stairwell fully enclosed

The area under the stairs must either form a cupboard or be fully enclosed. It is not acceptable to have the stairs soffit within the lower flat outside of an enclosure or cupboard.

Appendix A2 – Specific Flanking Conditions

Section A - cavity walls

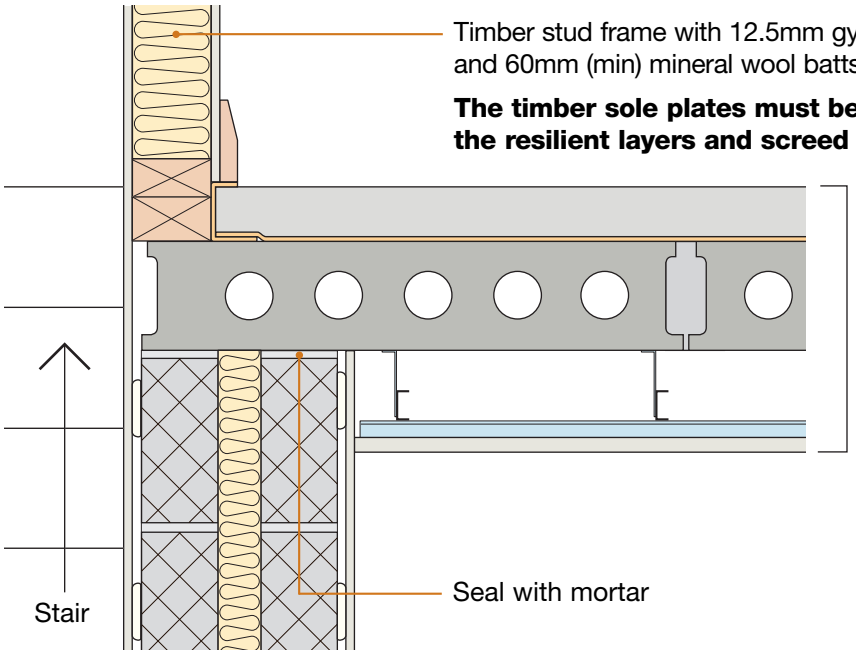

Alternative construction

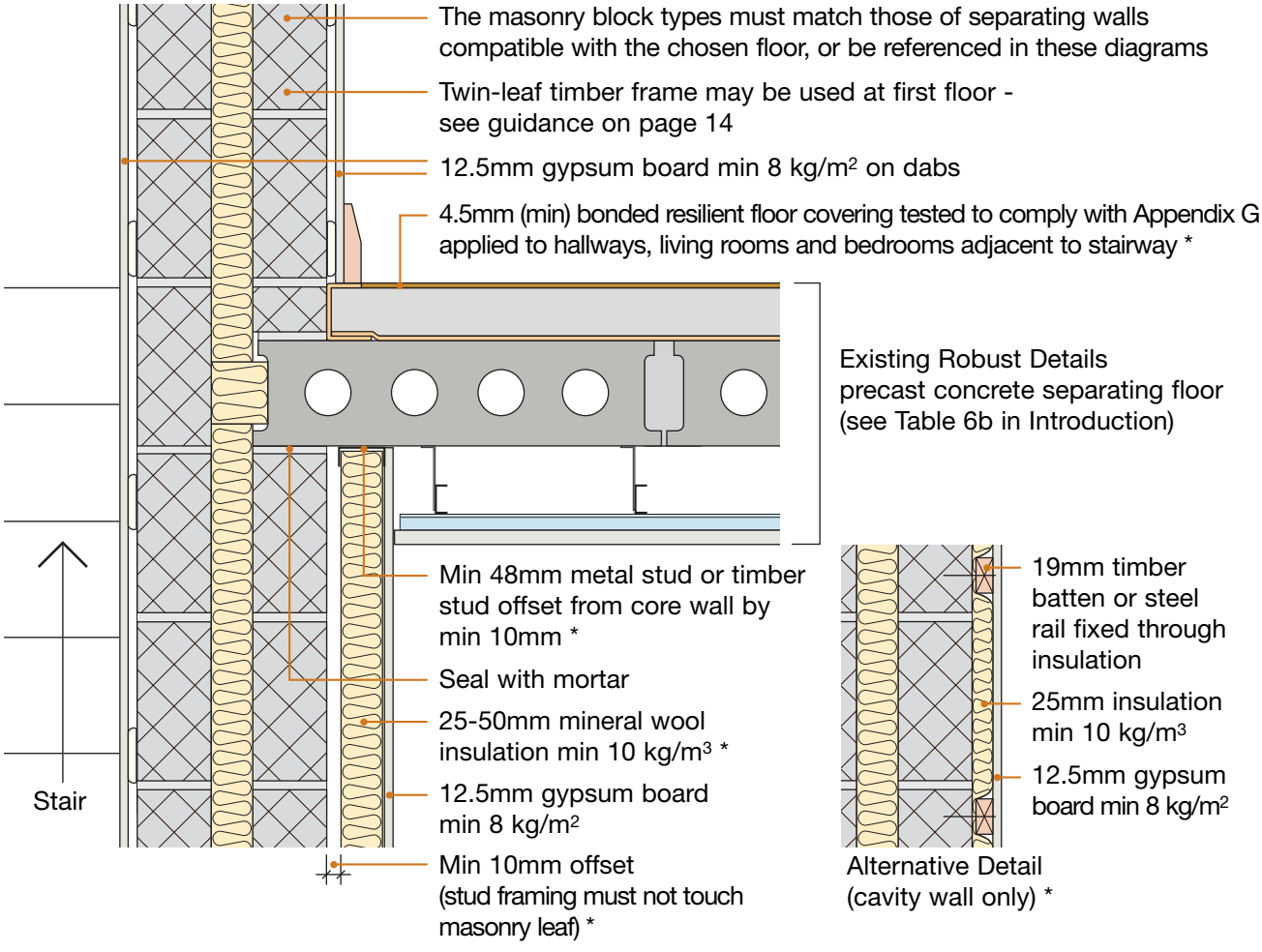

* The independent leaf and bonded resilient layer are optional where a cavity masonry wall is used at ground floor.

Appendix A2 – Specific Flanking Conditions

Section A - solid walls

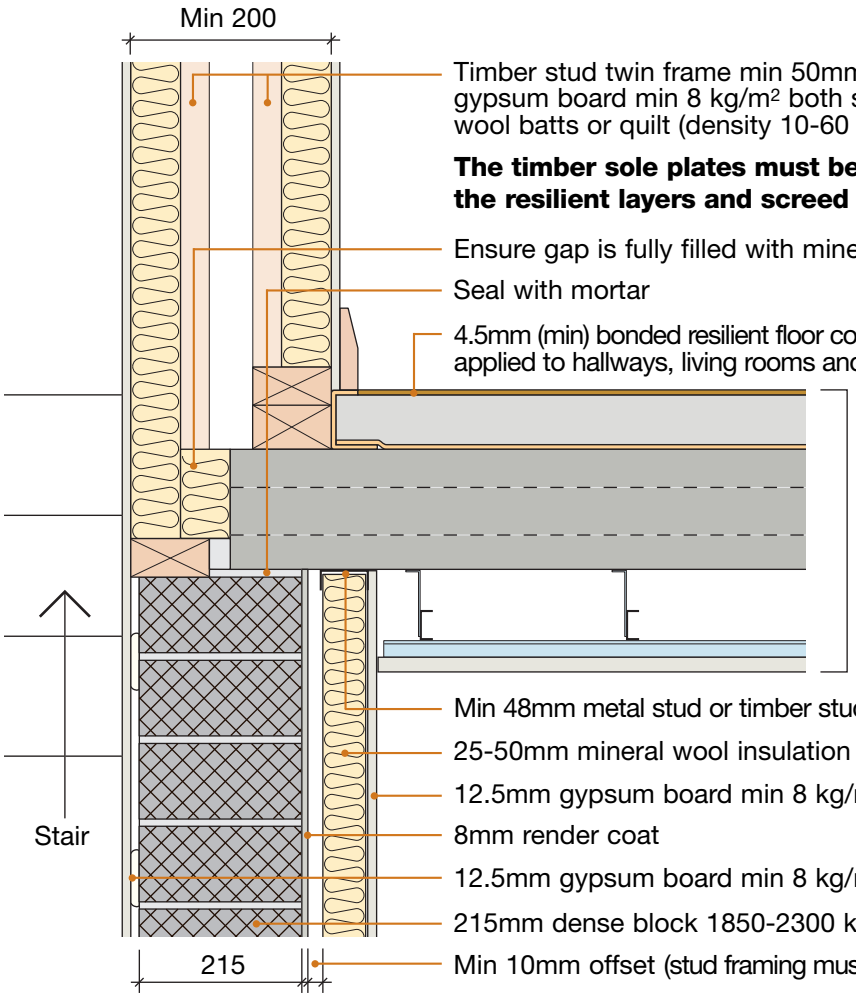

Appendix A2 – Specific Flanking Conditions

The stairs or timber block (see Alternative Detail) must be in place prior to installation of the resilient layers and screed

Section B - common junctions at stair landing
Timber stairs

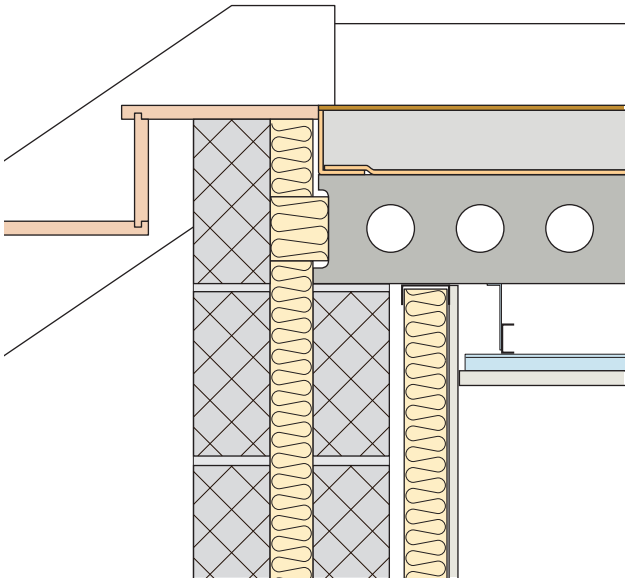

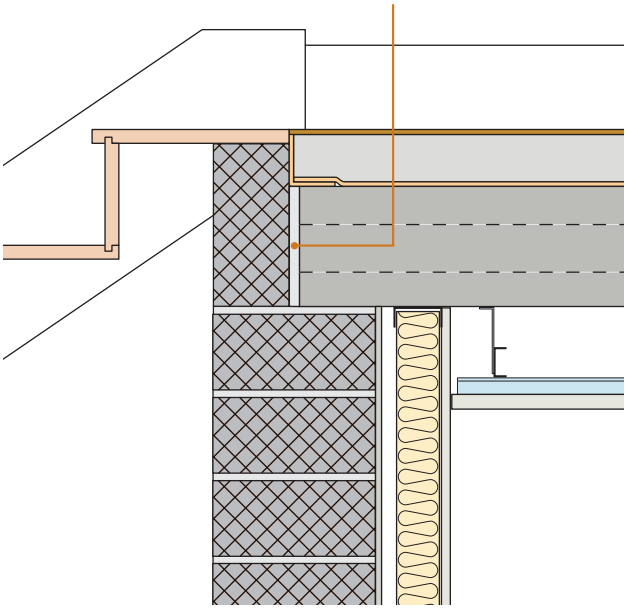

Section B - common junctions at stair landing
Concrete stairs

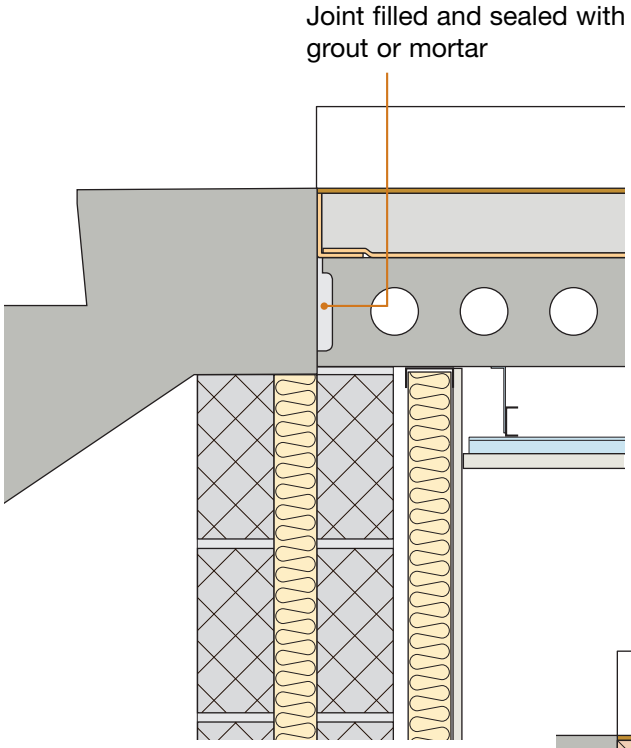

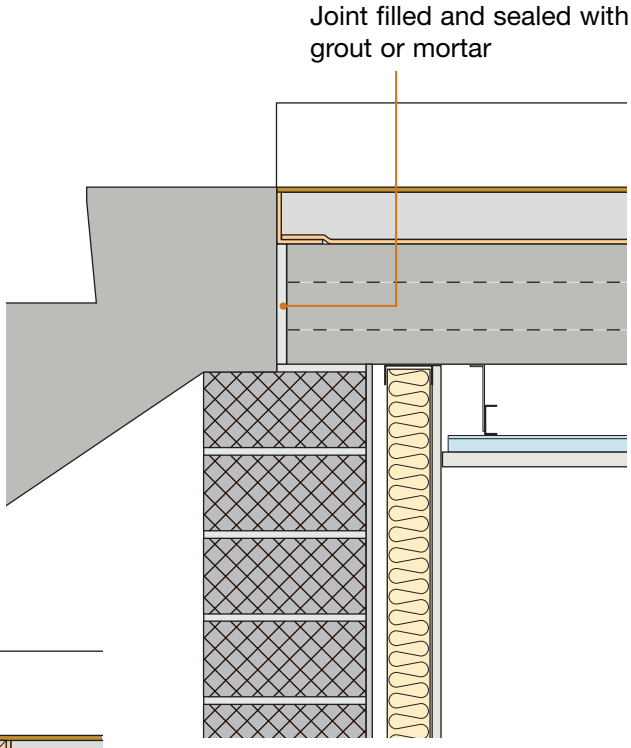

The independent leaf and bonded resilient layer are optional where a cavity masonry wall is used at ground floor.

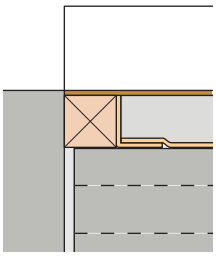

Alternative Detail at Floor/Stair Junction (can be used with any of the four configurations shown above)

Appendix A2 – Specific Flanking Conditions

Nu-Span and Spantherm pre-insulated ground floor concrete slabs for robustdetails® cavity separating walls. Refer to Table 6 in Introduction.

1. Slab installation - ground floor only

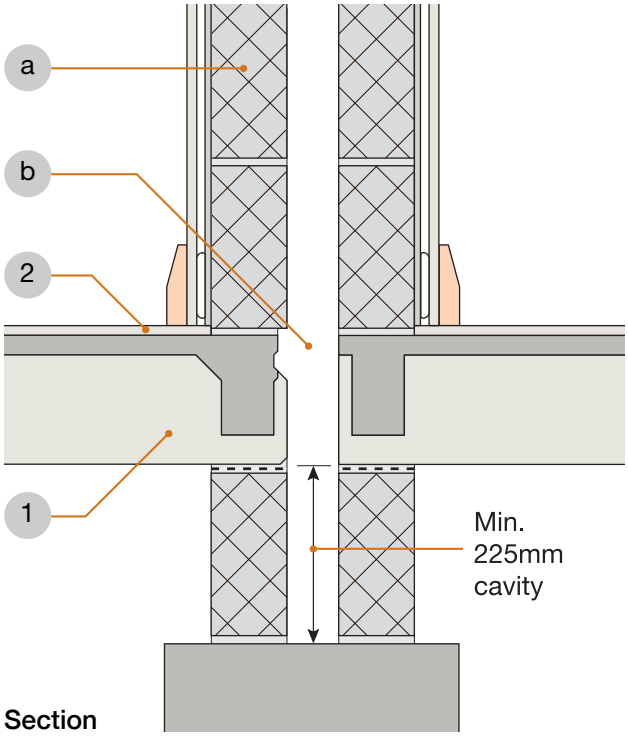

Section

Masonry walls

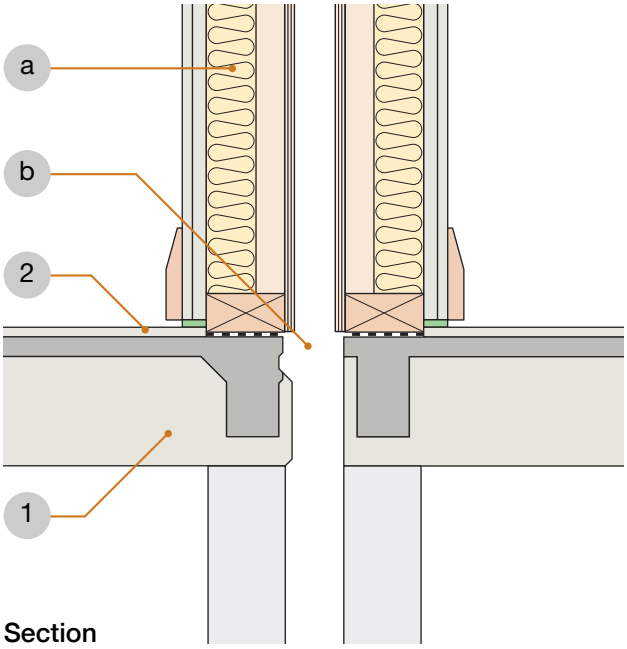

Section

Timber and light steel frame walls

2. Slab components

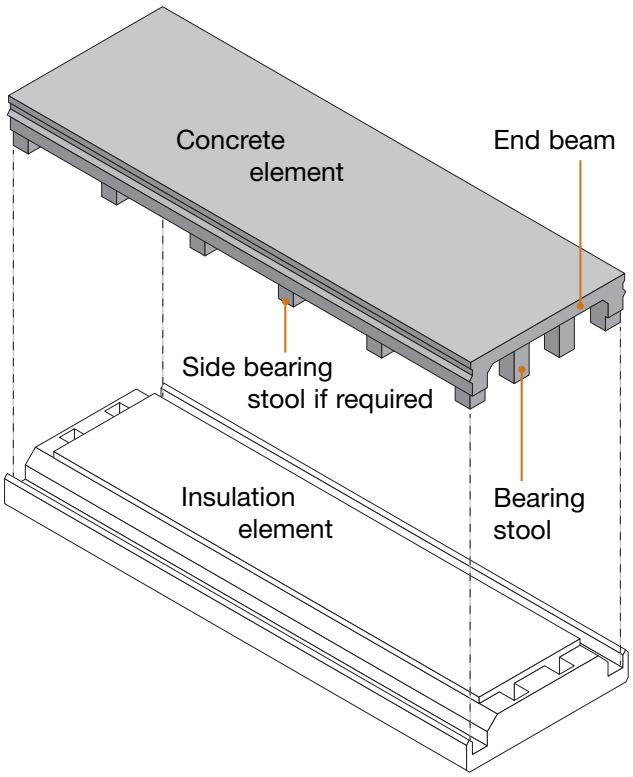

Key

1 Nu-Span or Spantherm pre-insulated slab, 300mm or 375mm deep.
Slabs can be end-bearing or side-bearing.

2 Nominal 10mm self-levelling compound. Thicker screed layers are also acceptable.

a robustdetails® separating wall. Refer to Table 6a in the Introduction and relevant Robust Detail in the Handbook.

b Maintain minimum cavity width specified for chosen robustdetails® separating wall. This can be insulated in accordance with the specification for the chosen wall type.

Contact details for Nu-Span:

Telephone: 01842 810445
E-mail: info@nu-span.com
Web: www.nu-span.com

Contact details for Spantherm:

Telephone: 01636 831043
E-mail: spantherm@creaghconcrete.com
Web: www.creaghconcrete.com

Appendix A2 – Specific Flanking Conditions

Details for supporting flanking walls above porch projections in timber frame houses. Refer to Table 6a in the Introduction.

Porch plan

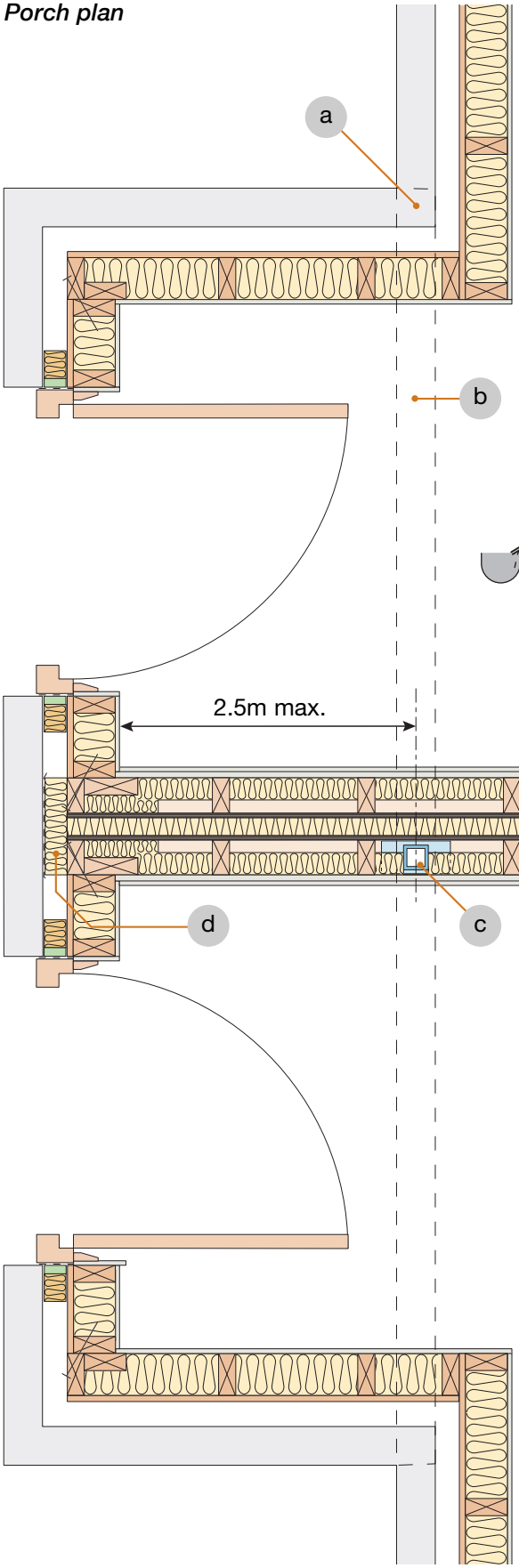

Porch roof section

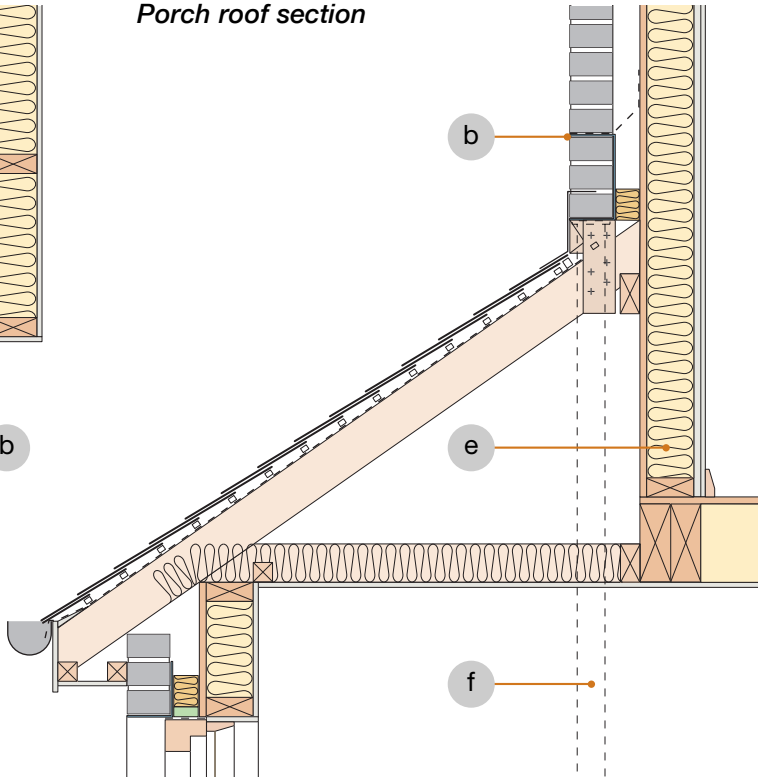

Key to plan and roof section

- **a** Outer bearing of lintel.
- **b** Lintel support above to masonry outer-leaf of flanking wall.
- **c** Steel support post, where required, permitted on one side.
- **d** Cavity stop.
- **e** Flanking wall.
- **f** Outline of support post.

Notes

Steel post support shown where required as an intermediate structural support and may only be used within the stud cavity of one timber frame of the separating wall. Lintels may also span clear where the design permits.

Appendix A2 – Specific Flanking Conditions

Details for supporting flanking walls above porch projections in timber frame houses. Refer to Table 6a in the Introduction.

Porch roof and lintel junction with separating wall

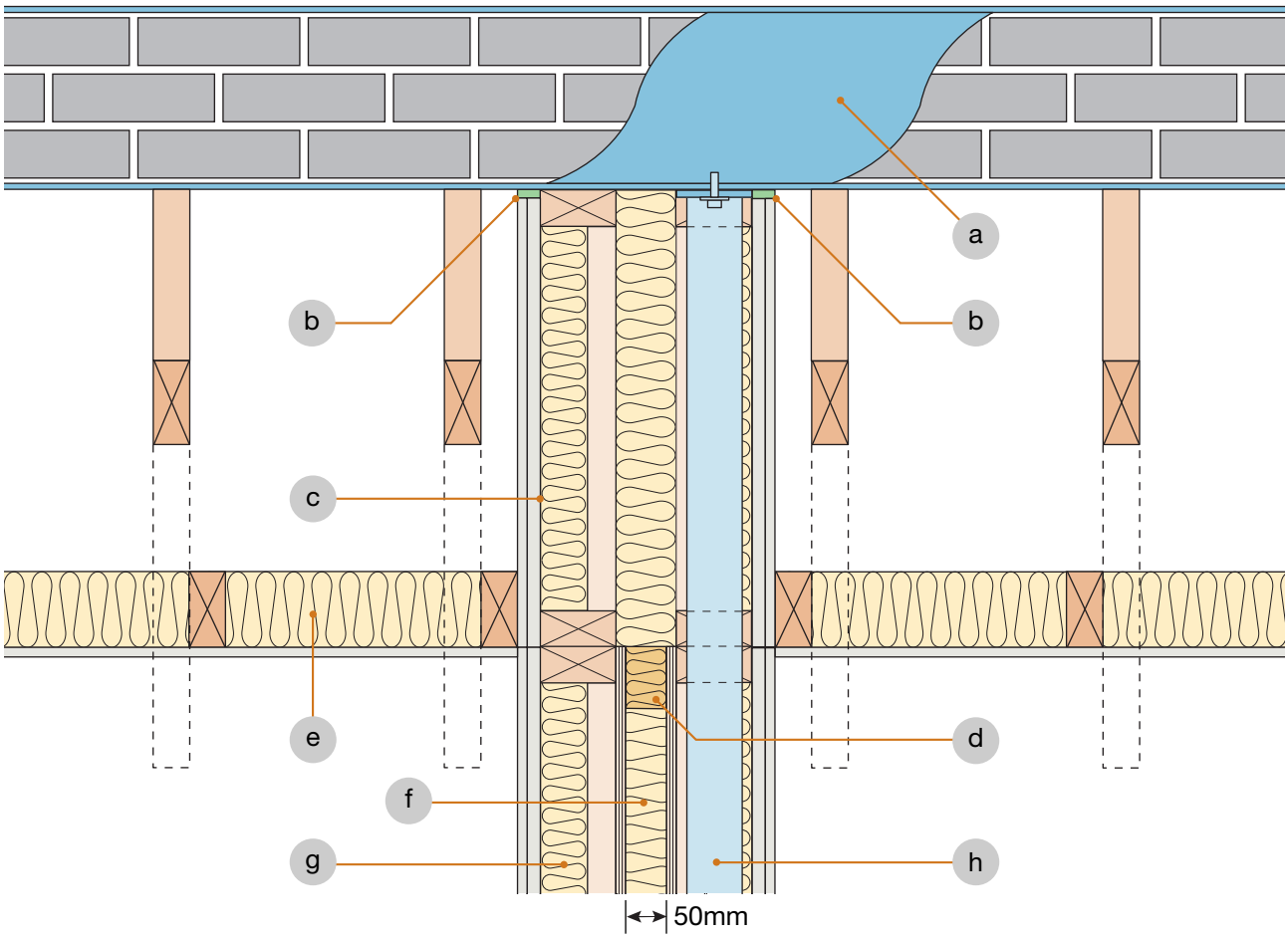

Porch ground floor junction

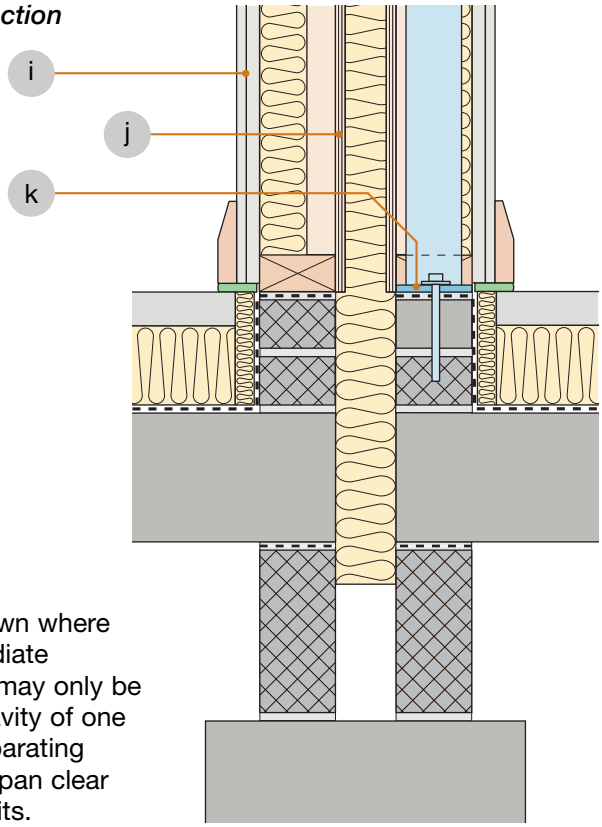

Key to floor and roof junctions

a Steel channel lintel in outer leaf.

b Flexible acoustic sealant.

c May use a twin spandrel above ceiling. See Appendix A1.

d Cavity stop.

e 100mm (min) mineral wool insulation (min.10 kg/m^2).

f Cavity dimension & insulation specified in robustdetails®.

g Absorbent material specified in robustdetails®.

h Steel post (if required) within one stud cavity of the frame only, and of smaller depth than stud.

i Wall lining specified in robustdetails®.

j Sheathing specified in robustdetails®.

k Steel base plate.

Notes

Steel post support shown where required as an intermediate structural support and may only be used within the stud cavity of one timber frame of the separating wall. Lintels may also span clear where the design permits.

Appendix A2 – Specific Flanking Conditions

This page is intentionally blank

Appendix C

Determination of the acoustic performance requirements for floating floor treatments used with robustdetails® timber separating floors

To determine the acoustic performance of floating floor treatments on robustdetails® timber separating floors airborne and impact measurements should be undertaken in an acoustic test laboratory. The following test procedure may be used for robustdetails® timber separating floors with floating floor treatments. The following sections C.1 to C.4 outline the measurement and performance rating criteria.

C.1 Test Laboratory Requirements

The test facility must have UKAS Accreditation (or EC equivalent) for the measurement of sound insulation in the laboratory, for both airborne sound insulation and impact sound transmission. The test measurement should be undertaken in accordance with BS EN IS0 10140-2, BS EN ISO 10140-3 and BS EN ISO 10140-4 and the performance of each measurement rated in accordance with BS EN ISO 717 (Parts 1 & 2). The measurements should be undertaken in a laboratory with suppressed flanking transmission and in accordance with BS EN IS0 10140-5.

The R'_{max} value of the laboratory test facility shall be at least 15 dB greater than the sound insulation value of the structure under test.

C.2 Core (or base) Timber Floor and Floating Floor Treatment

Testing should be undertaken on a core (or base) floor which consists of the following construction specification:

Floor Decking	18mm OSB timber decking board (or equivalent timber based board) with mass per unit area of 10-11 kg/m^2
Joists	245mm x 45mm solid timber joists C24 grade timber
Insulation	100mm glass based mineral wool insulation with a density of 10-11 kg/m^3
Ceiling	Two layers of gypsum-based board with an overall mass per unit area of 23-25 kg/m^2.

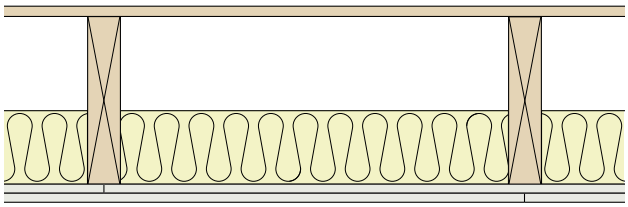

Laboratory Test Core Floor Construction

The timber joists should be mounted on joist hangers at 450mm centres and the 100mm (deep) glass based mineral wool insulation should be placed in the cavities between the joists and also between cavities formed between the joists and the test aperture border. The floor decking should be mounted on the timber joists with screws at 300mm centres. All junctions between the floor surface perimeter and test aperture should be sealed with a flexible or acoustic sealant.

The ceiling layers should be mounted with joints staggered and the first layer (inner layer) should be fixed to the underside of the joists with screws, at 300mm centres within the field of the boards and at 150mm centres at the board ends. The second layer (outer layer) should be fixed with screws, at 230mm centres within the field of the boards and at 150mm centres at the board ends. The perimeter of the ceiling should be sealed with flexible or acoustic mastic sealant and all joints and screwheads taped with self-adhesive tape

Floating Floor Treatment

The floating floor treatment should cover the entire test area of the core floor surface and should be constructed in accordance with the manufacturer's instructions. All robustdetails® floating floor treatments require a flanking strip to isolate the edge of the floorboard from the perimeter walls. As such the manufacturer should also use the flanking strip, which they would normally use on site, in the laboratory measurements.

C.3 Testing Required

For the purposes of evaluating the performance of a floating floor treatment for Robust Details involving timber separating floors four different measurements are required (2 airborne and 2 impact measurements). The following measurements are required:

Airborne

Test 1 Determination of R_w+C_{tr} for the core (or base) timber floor.

Test 2 Determination of R_w+C_{tr} for the core (or base) timber floor with the floating floor treatment applied to the core floor surface.

Impact

Test 3 Determination of $L_{n,w}$ for the core (or base) timber floor.

Test 4 Determination of $L_{n,w}$ for the core (or base) timber floor with the floating floor treatment applied to the core floor surface.

Appendix C

C.4 Expression of Performance

The airborne sound insulation performance of the floating floor treatment should be expressed as the improvement in airborne sound insulation ($rd\Delta R_w+C_{tr}$) as a result of the application of the floating floor treatment to the core floor ($rd\Delta R_w+C_{tr}$ = Test 2 - Test 1).

The impact sound transmission performance of the floating floor treatment should be expressed as the reduction in impact sound transmission ($rd\Delta L_w$) as a result of the application of the floating floor treatment to the core floor ($rd\Delta L_w$ = Test 3 - Test 4).

C.5 Performance Requirement

The floating floor treatment:

a) Must achieve a minimum laboratory performance of $rd\Delta R_w+C_{tr}$ = 13dB and $rd\Delta L_w$ = 15dB.

b) Must be installed in accordance with the manufacturer's instructions.

c) Requires 5mm (min) resilient flanking strips around the perimeter of the flooring board to isolate floor from walls and skirting.

For further guidance on floating floor treatments and flanking strips, please refer to Appendix A.

Note: Existing tests of floating floor treatments undertaken in accordance with previous versions of this Appendix C remain acceptable.

Appendix E

Determination of the acoustic performance requirements for resilient bars used on ceilings

To determine the acoustic performance of resilient bars for use within robustdetails® separating floors airborne and impact measurements should be undertaken in an acoustic test laboratory. The performance of the resilient bars is calculated from the improvement in airborne and impact performance by a ceiling connected via resilient bars as opposed to a direct fix ceiling. The ceiling linings should be identical in both tests. The following sections E.1 to E.4 outline the measurement and performance rating criteria.

E.1 Test Laboratory Requirements

The test facility must have UKAS Accreditation (or EC equivalent) for the measurement of sound insulation in the laboratory, for both airborne sound insulation and impact sound transmission. The test measurement should be undertaken in accordance with BS EN IS0 140-3, BS EN IS0 140-6 and the performance of each measurement rated in accordance with BS EN ISO 717 (Parts 1 & 2). The measurements should be undertaken in a laboratory with suppressed flanking transmission and in accordance with BS EN ISO 140-1 and BS EN ISO 140-2.

The R'_{max} value of the laboratory test facility shall be at least 15 dB greater than the sound insulation value of the structure under test.

E.2 Direct Fix Ceiling versus Resilient Bar Ceiling

Testing should be undertaken on a floor with a direct fix ceiling which consists of the following construction specification:

Floor Decking	18mm OSB timber decking board (or equivalent timber based board) with mass per unit area of 10-11 kg/m^2
Joists	245mm x 45mm solid timber joists C24 grade timber
Insulation	100mm glass based mineral wool insulation with a density of 10-11 kg/m^3
Ceiling	Two layers of gypsum-based board with an overall mass per unit area of 23-25 kg/m^2.

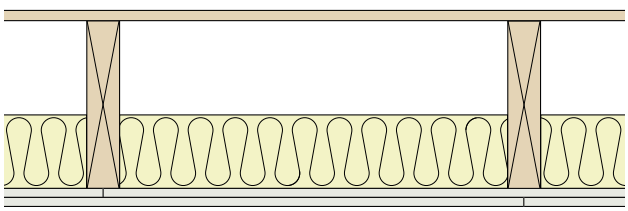

Laboratory Test Construction of Floor with Direct Fix Ceiling

The timber joists should be mounted on joist hangers at 450mm centres and the 100mm (deep) glass based mineral wool insulation should be placed in the cavities between the joists and also between cavities formed between the joists and the test aperture border. The floor decking should be mounted on the timber joists with screws at 300mm centres. All junctions between the floor surface perimeter and test aperture should be sealed with a flexible or acoustic sealant.

The direct fix ceiling is composed of two layers of gypsum-based board which have an overall mass per unit area of 23-25 kg/m^2 and have a minimum overall thickness of 30mm. The ceiling layers should be mounted with joints staggered and the first layer (inner layer) should be fixed to the underside of the joists with screws, at 300mm centres within the fields of the boards and 150mm centres at the board ends, and the second layer (outer layer) should be fixed with screws, at 230mm centres within the fields of the boards and at 150mm centres at the board ends. The perimeter of the ceiling should be sealed with flexible or acoustic sealant and all joints and screwheads taped with self-adhesive tape.

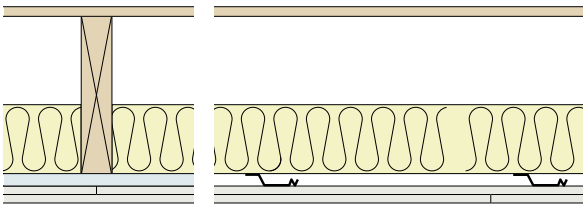

Laboratory Test Construction of Floor with the Ceiling Connected via Resilient Bars

The floor construction and materials used should be identical to the Direct Fix test structure except that the ceiling is only connected to the joists via the resilient bars. The resilient bars should be directly connected to the joists at 400mm centres using metal screws, mounted perpendicular to the joist span and in accordance with the manufacturer's instructions. The gypsum-based board ceiling layers should be identical in their material properties to those used for the Direct Fix ceiling.

Appendix E

E.3 Testing Required

For the purposes of evaluating the performance of resilient bars for robustdetails®, four different measurements are required (2 airborne and 2 impact measurements). The following measurements are required:

Airborne

Test 1 Determination of R_w+C_{tr} for the floor with a direct fix ceiling.

Test 2 Determination of R_w+C_{tr} for the floor with a ceiling connected with resilient bars.

Impact

Test 3 Determination of $L_{n,w}$ for the floor with a direct fix ceiling.

Test 4 Determination of $L_{n,w}$ for the floor with a ceiling connected with resilient bars.

E.4 Expression of Performance

The airborne sound insulation performance of resilient bars should be expressed as the improvement in airborne sound insulation ($rd\Delta R_w+C_{tr}$) as a result of the application of the resilient bar connected ceiling as opposed to the direct fix ceiling ($rd\Delta R_w+C_{tr}$ = Test 2 - Test 1).

The impact sound transmission performance of resilient bars should be expressed as the reduction in impact sound transmission ($rd\Delta L_w$) as a result of the application of the resilient bar connected ceiling as opposed to the direct fix ceiling ($rd\Delta L_w$ = Test 3 - Test 4).

E.5 Performance Requirement

The requirement performance of resilient bars used in robustdetails® separating floors is stated in the ceiling treatment section of each applicable detail.

Note: Existing tests of resilient bars undertaken in accordance with previous versions of this Appendix E remain acceptable.

Appendix F

Determination of the Influence on the Acoustic Performance of robustdetails® Lightweight Separating Floors due to the presence of Downlighters (Recessed Lighting)

To determine the influence on the acoustic performance due to the presence of downlighters for use within robustdetails® lightweight separating floors, airborne and impact measurements should be undertaken in an acoustic test laboratory. For the purposes of robustdetails® separating floors the following test procedure may be used.

Note: This test method may also be used by manufacturers to demonstrate whether they can exceed the spacing/area criteria which are specified in the Robust Detail specification sheets for the robustdetails® separating floors.

The influence on the acoustic performance of the floor is calculated from airborne and impact measurements on a timber floor structure with and without downlighters present. The timber floor structure must be identical in both sets of tests (for airborne and impact) except for the presence of the downlighters.

For downlighters to qualify for inclusion in robustdetails® lightweight separating floors, the difference in performance with the downlighters present should be no worse than 1dB for both airborne and impact measurements, when tested under the following conditions. The following sections F.1 to F.4 outline the measurement and performance rating criteria.

F.1 Test Laboratory Requirements

The test facility must have UKAS Accreditation (or EC equivalent) for the measurement of sound insulation in the laboratory, for both airborne sound insulation and impact sound transmission. The test measurement should be undertaken in accordance with BS EN ISO 140-3, BS EN ISO 140-6 and the performance of each measurement rated in accordance with BS EN ISO 717 (Parts 1 & 2). The measurements should be undertaken in a laboratory with suppressed flanking transmission and in accordance with BS EN ISO 140-1 and BS EN ISO 140-2.

The R'_{max} value of the laboratory test facility shall be at least 15dB greater than the sound insulation value of the structure under test.

F.2 Core Timber Floor (no downlighters)

Testing should be undertaken on a floor with the following construction specification:

Floor Decking	18mm OSB timber decking board (or equivalent timber based board) with mass per unit area of 10-11 kg/m^2
Joists	245mm x 45mm solid timber joists C24 grade timber
Insulation	100mm glass based mineral wool insulation with a density of 10-11 kg/m^3
Ceiling	Two layers of gypsum-based board with an overall mass per unit area of 23-25 kg/m^2.

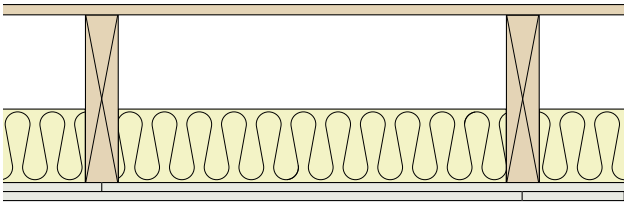

Construction of Initial Timber Floor (no downlighters)

The timber joists should be mounted on joist hangers at 450mm centres and the 100mm (deep) glass based mineral wool insulation should be placed in the cavities between the joists and also between cavities formed between the joists and the test aperture border. The floor decking should be mounted on the timber joists with screws at 300mm centres. All junctions between the floor surface perimeter and test aperture should be sealed with a flexible or acoustic mastic sealant.

The direct fix ceiling is composed of two layers of gypsum-based board which have an overall mass per unit area of 23-25 kg/m^2 and have a minimum overall thickness of 30mm. The ceiling layers should be mounted with joints staggered and the first layer (inner layer) should be fixed to the underside of the joists with screws, at 300mm centres within the fields of the boards and 150mm centres at the board ends, and the second layer (outer layer) should be fixed with screws, at 230mm centres within the fields of the boards and at 150mm centres at the board ends. The perimeter of the ceiling should be sealed with flexible or acoustic mastic sealant and all joints and screwheads taped with self adhesive tape.

Construction of Timber Floor with Downlighters

The floor construction and materials used should be identical to the initial timber floor test structure except that downlighters have been installed into the ceiling. The downlighters should be spaced at a minimum of 1 downlighter per 2m^2 of ceiling area and at not less than 0.75m spacings. (e.g. 10m^2 of ceiling area equates to at least 5 downlighters). The test results must indicate the number per unit area and the spacings used in the tests and, if successful manufacturers are expected to include this information in their test reports and fitting instructions.

Appendix F

F.3 Testing Required

For the purposes of evaluating the influence on performance due to downlighters for robustdetails® lightweight separating floors, four different measurements are required (2 airborne and 2 impact measurements). The following measurements are required:

Airborne

Test 1 Determination of R_w+C_{tr} for the initial timber floor

Test 2 Determination of R_w+C_{tr} for the initial timber floor plus downlighters

Impact

Test 3 Determination of $L_{n,w}$ for the initial timber floor.

Test 4 Determination of $L_{n,w}$ for the initial timber floor plus downlighters

F.4 Performance Required for robustdetails® Lightweight Separating Floors

For airborne sound insulation performance the difference between Test 2 and Test 1 (Test 2 -Test 1) should be no worse than (-1dB)

For impact sound transmission performance the difference between Test 3 and Test 4 (Test 3 -Test 4) should be no worse than (-1dB).

NOTE: Downlighters which qualify for the above performance requirements must also be of suitable integrity to meet the appropriate Building Regulations for Fire.

Note: Existing tests of resilient bars undertaken in accordance with previous versions of this Appendix F remain acceptable.